# DSP5

PARTI DI RICAMBIO
PIECES DETACHEES
SPARE PARTS
ERSATZTEILE

REV. A
Ed.04/2003

| | | | |
|---|---|---|---|
| siler | GRUPPO LAVAGGIO - COMPOSANTS LAVAGE<br>WASH COMPONENTS - WASCHROHR | MOD.<br>**DSP5** | TAV.<br>**1 A**<br>ED. 04/2003 |



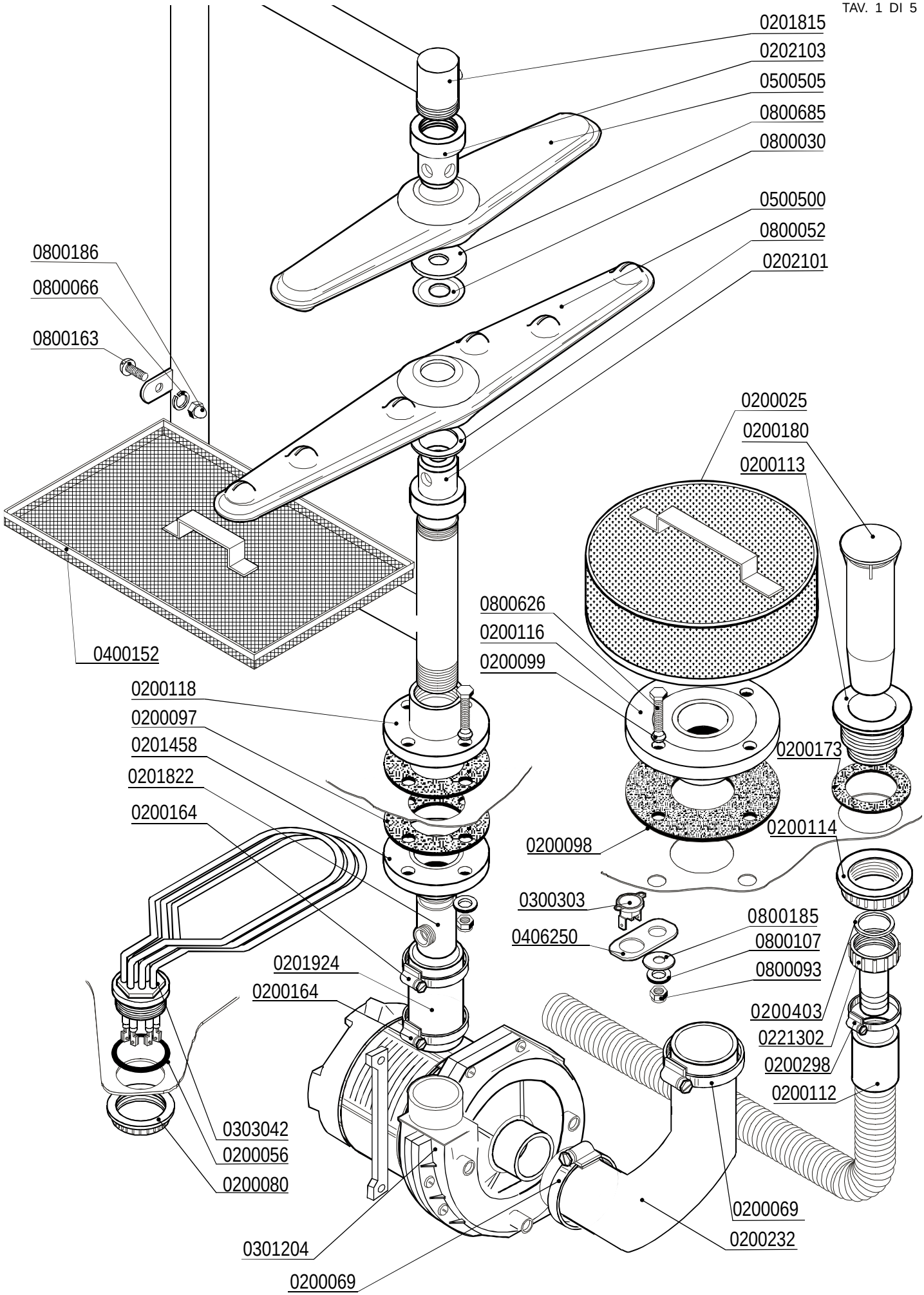

| siler | GRUPPO RISCIACQUO - COMPOSANTS RINCAGE<br>RINSE COMPONENTS - NACHSPÜLROHR | MOD.<br>**DSP5** | TAV.<br>**2 A**<br>ED. 04/2003 |
|---|---|---|---|



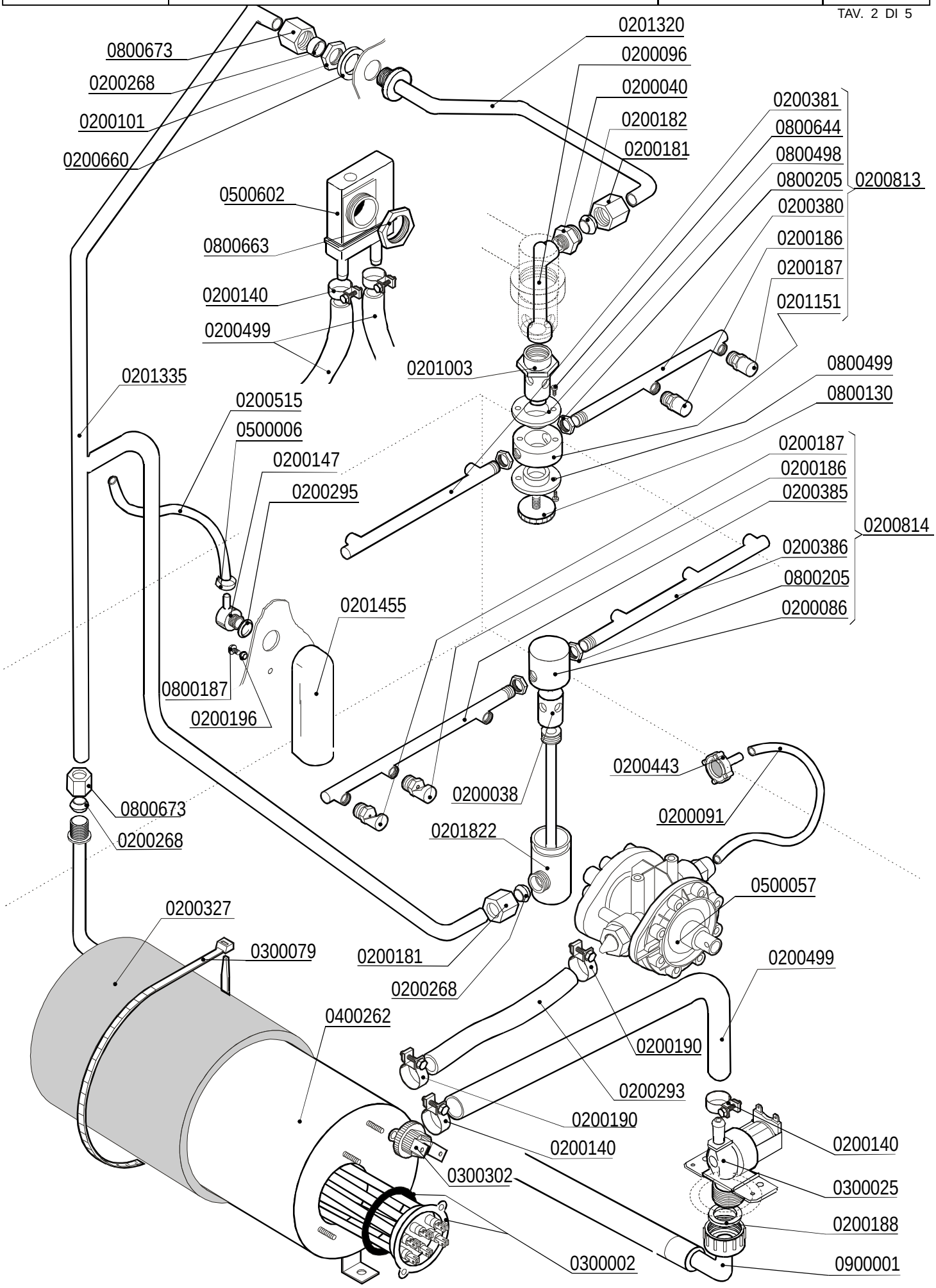

| | | | |
|---|---|---|---|
| siler | QUADRO ELETTRICO - TABLEAU ELECTRIQUE<br>CONTROL BOX - SCHALT-TAFEL | MOD.<br>**DSP5** | TAV.<br>**3 A**<br>ED. 04/2003 |



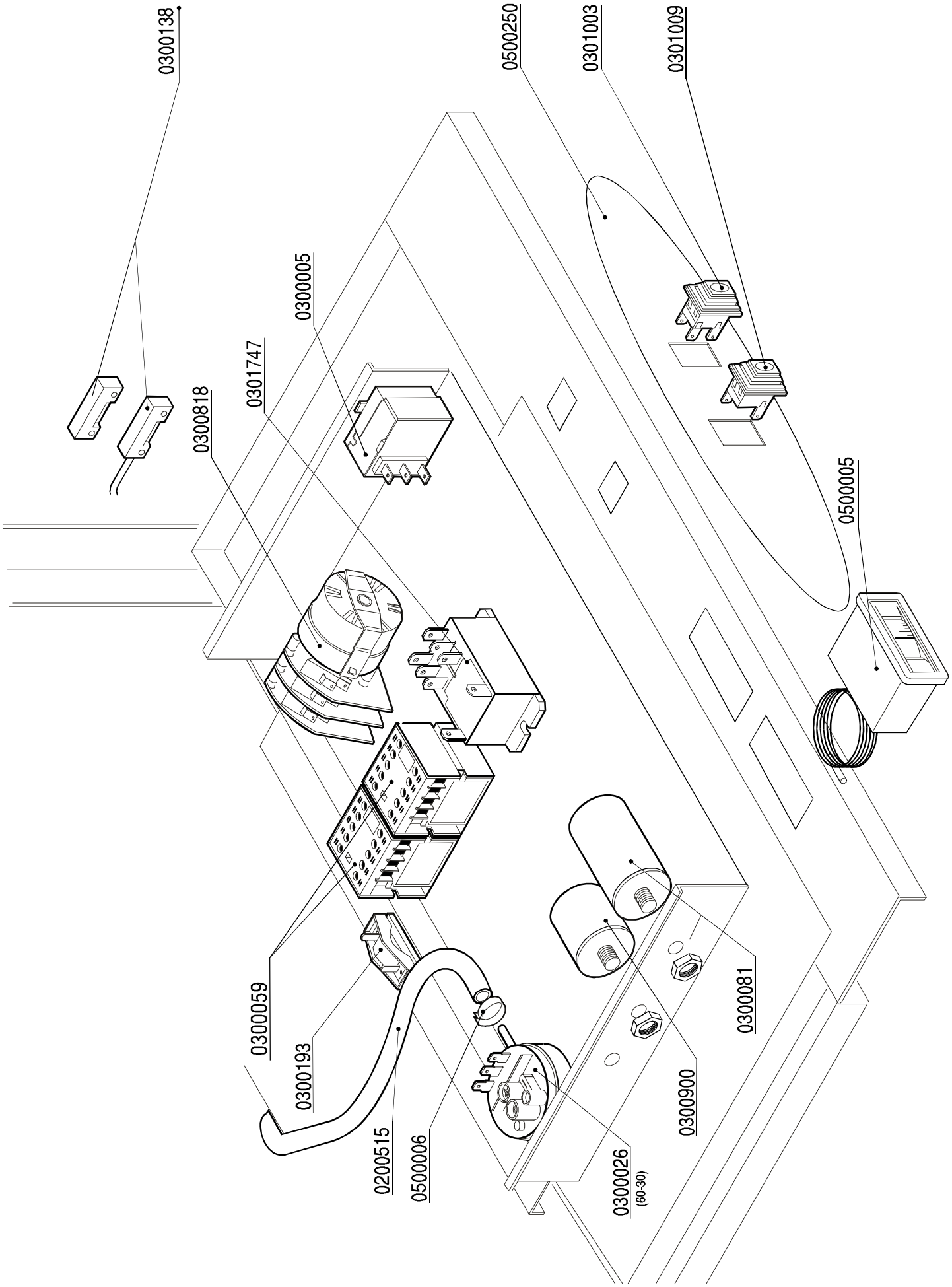

| | | | |
|---|---|---|---|
| siler | GRUPPO SOLLEVAMENTO - GROUPE SOULEVEMENT<br>LIFTING COMPONENTS - HÖHENTRIEB | MOD.<br>**DSP5** | TAV.<br>**4 A**<br>ED. 04/2003 |



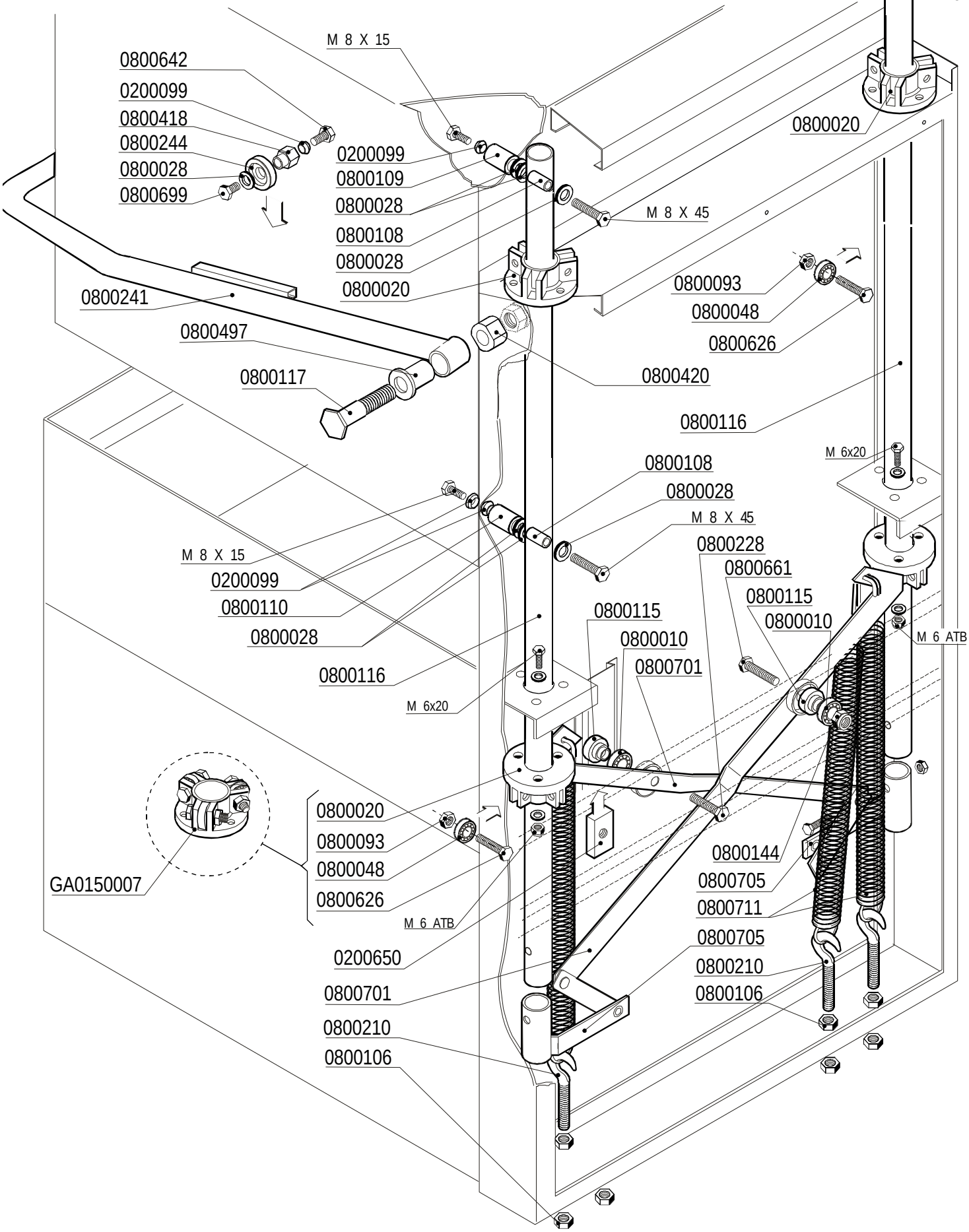
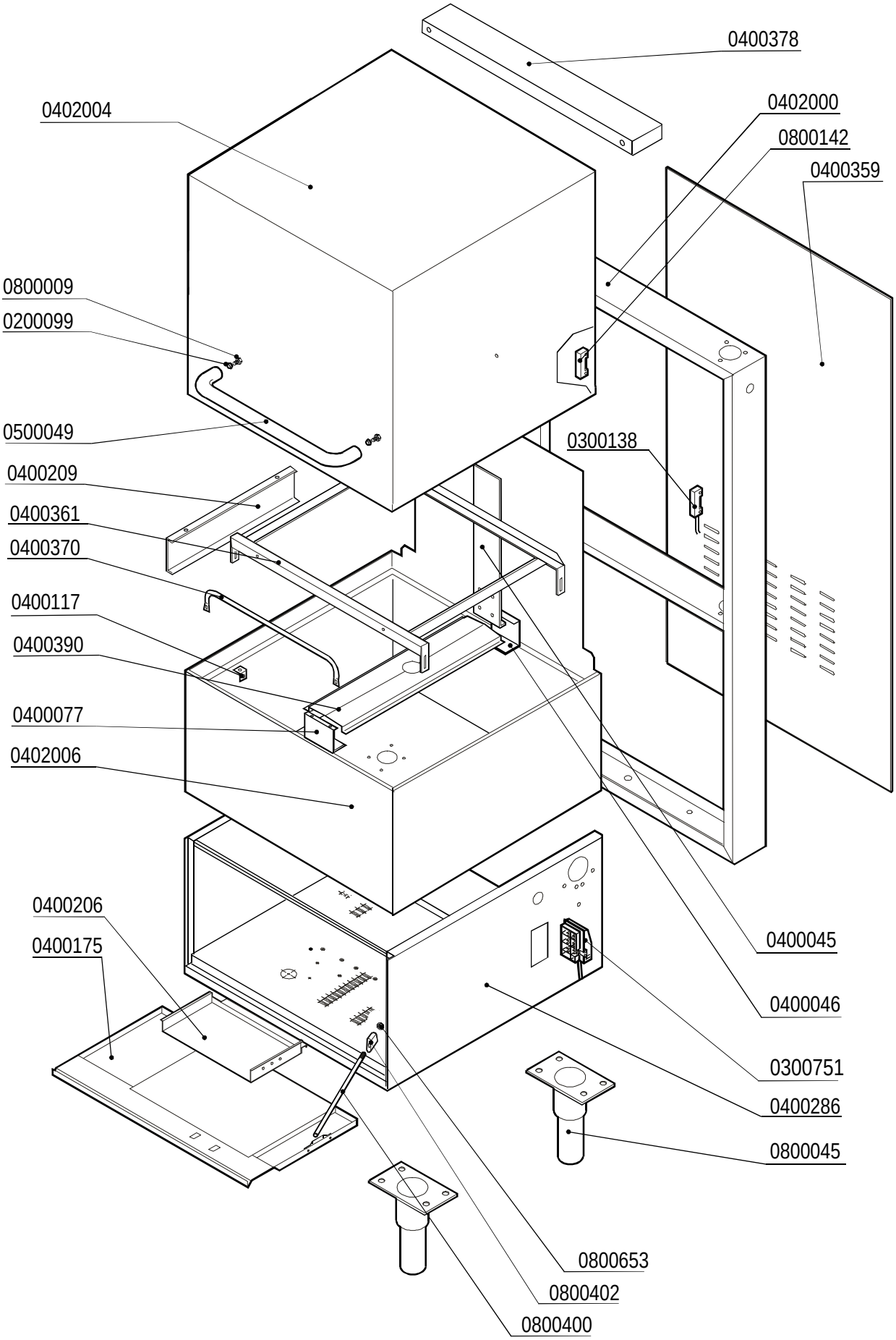
| siler | CARROZZERIA - CARROSSERIE<br>HOOD - KARROSSERIE | MOD.<br>**DSP5** | TAV.<br>**5 A**<br>ED. 04/2003 |
|---|---|---|---|