KROMO	TABLE KI4420	REV 06

DISHWASHER K50-K80
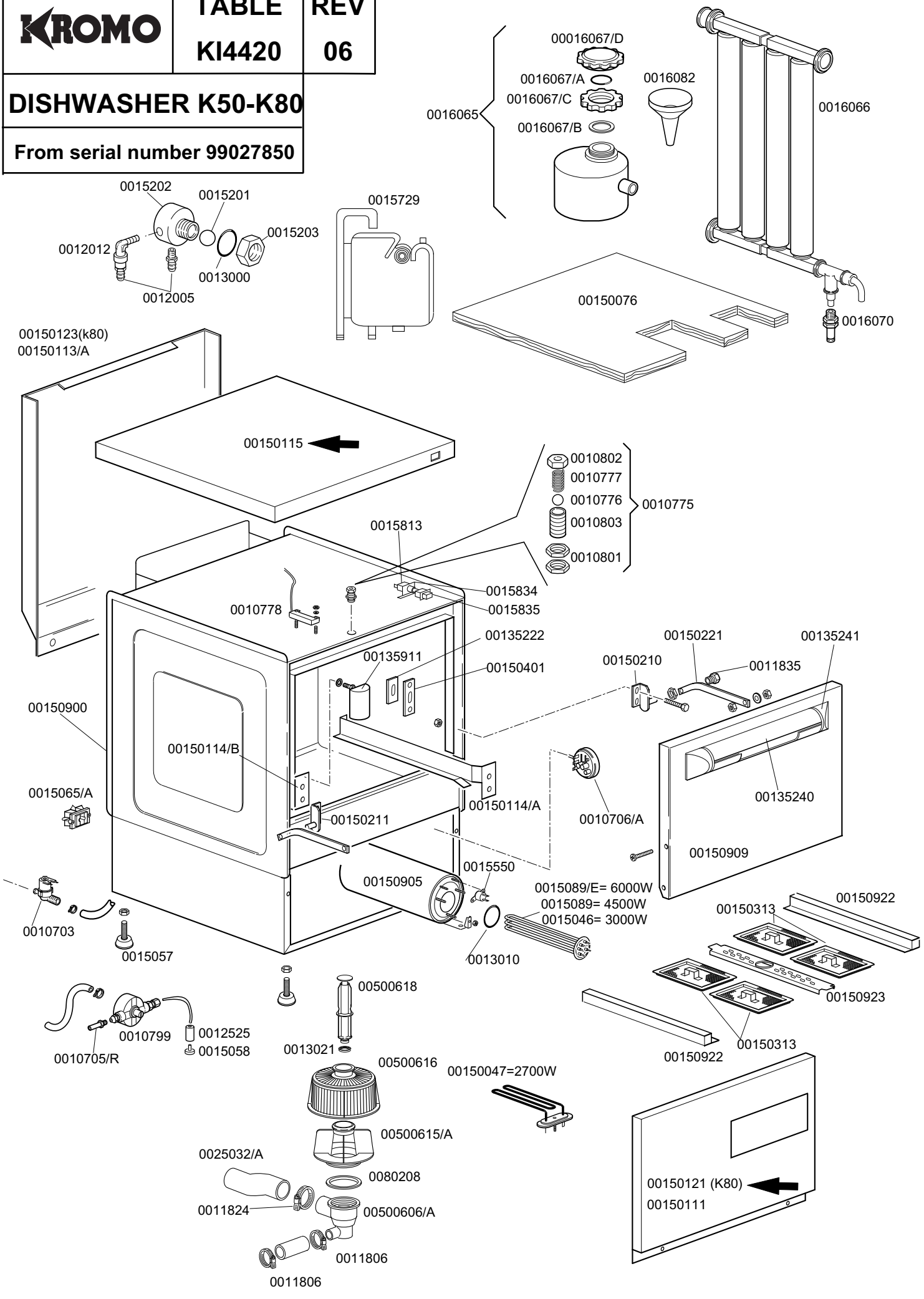
From serial number 99027850