BIOsteel	TABLE BS1410	REV 00
BS 1300		

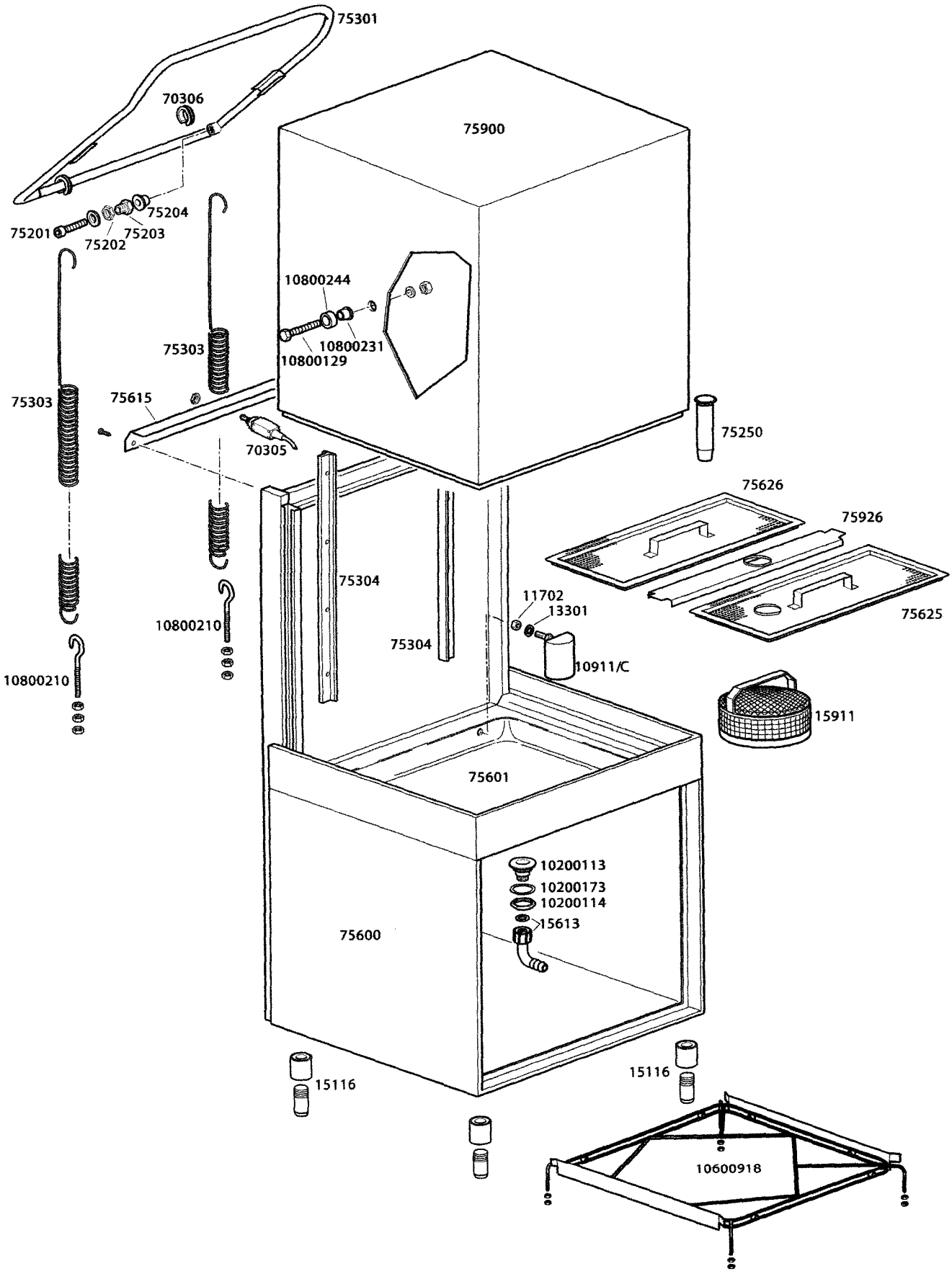

DISH-WASHER BS 1300

TABLE
BS1410

CODE	DESCRIPTION	CODE	DESCRIPTION
11702	M8 stainless steel nut		
13301	14x8x1,5 d. gasket		
15116	Complete 2" P 130 small foot		
15613	1" nylon elbow		
15911	Complete stainless steel filter		
70305	MF17 switch for roller conveyor		
70306	Spring hook-joint		
75201	M14x39 stainless steel bolt		
75202	22x6 M18 brass nut		
75203	22x14 M18 brass bush		
75204	22x13 d. nylon bush		
75250	Overflow device		
75301	Handle		
75303	Rear spring		
75304	Top runner		
75600	Complete stainless steel base		
75601	Complete tub		
75615	Back axis		
75625	Filter with hole		
75626	Filter		
75900	Top hood		
75926	Axis filter holder		
10200113	Floor drain		
10200114	Drain pipe fitting nut		
10200173	Drain pipe fitting		
10600918	Stainless steel basket support		
10800129	Fixing pin		
10800210	M10x60 tie rod screw with hook		
10800231	Bush for door roller		
10800244	Door roller		
10911/C	Complete air trap		