BIOsted	TABLE BS1425	REV 00
BS 1300		

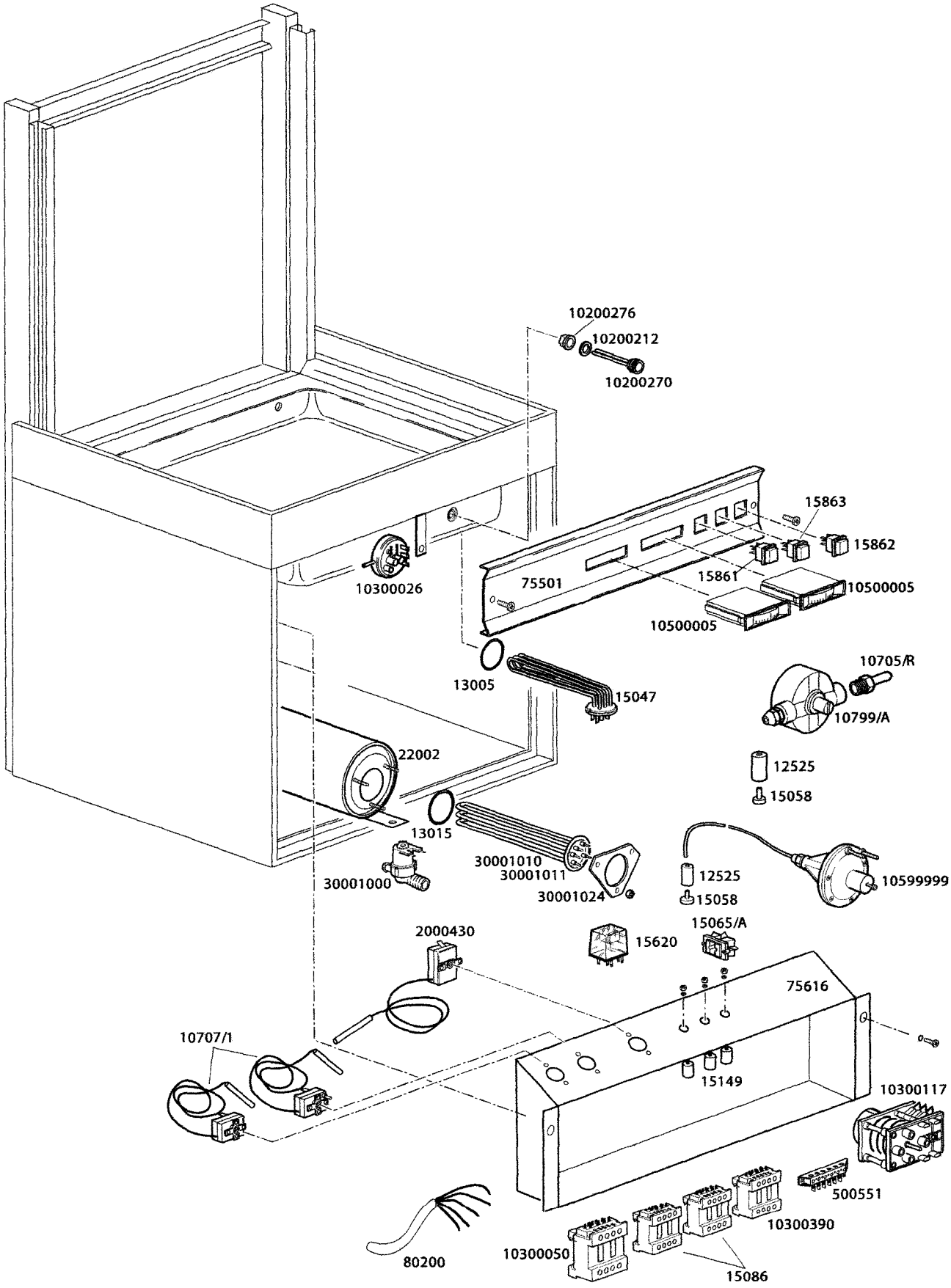

DISH-WASHER BS 1300

TABLE
BS1425

CODE	DESCRIPTION	CODE	DESCRIPTION
12525	Counter weight for small filter		
13005	Tank OR heating element gasket		
13015	Boiler OR heating element gasket		
15058	Small shining product suction filter		
15086	230V 4C remote control switch		
15149	Low noise filter		
15620	16A 230V bi-polar relay		
15861	Bi-polar push button		
15862	Luminous pilot lamp		
15863	Bi-polar deviator		
22002	Complete stainless steel boiler		
75501	Control panel		
75616	Component support		
80200	5x4x3400 cable		
500551	6 poles FV122 terminal board		
2000430	Conveyor safety thermostat		
10200212	31x21x2 rubber gasket		
10200270	Double sheath		
10200276	1/2 inch. nut for probe		
10300026	76-38 pressure switch		
10300050	25-12A 4NA meter		
10300117	60-90-120 sec 50HZ timer		
10300390	220V 3NA1NC auxiliary meter		
10500005	Thermometer horizontal		
10599999	Shining product dosing device		
30001000	14 d. single solenoid valve		
30001010	6000W boiler heating element		
30001011	9000W boiler heating element		
30001024	Flange for resistance		
10705/R	d.8 pipe fitting		
10707/1	0-90°C TR2 thermostat		
10799/A	3 way shining product dosing device		
15065/A	Cable fastener with screw		