BIOsted	TABLE BS1420	REV 00
BS 1300 Insulated		

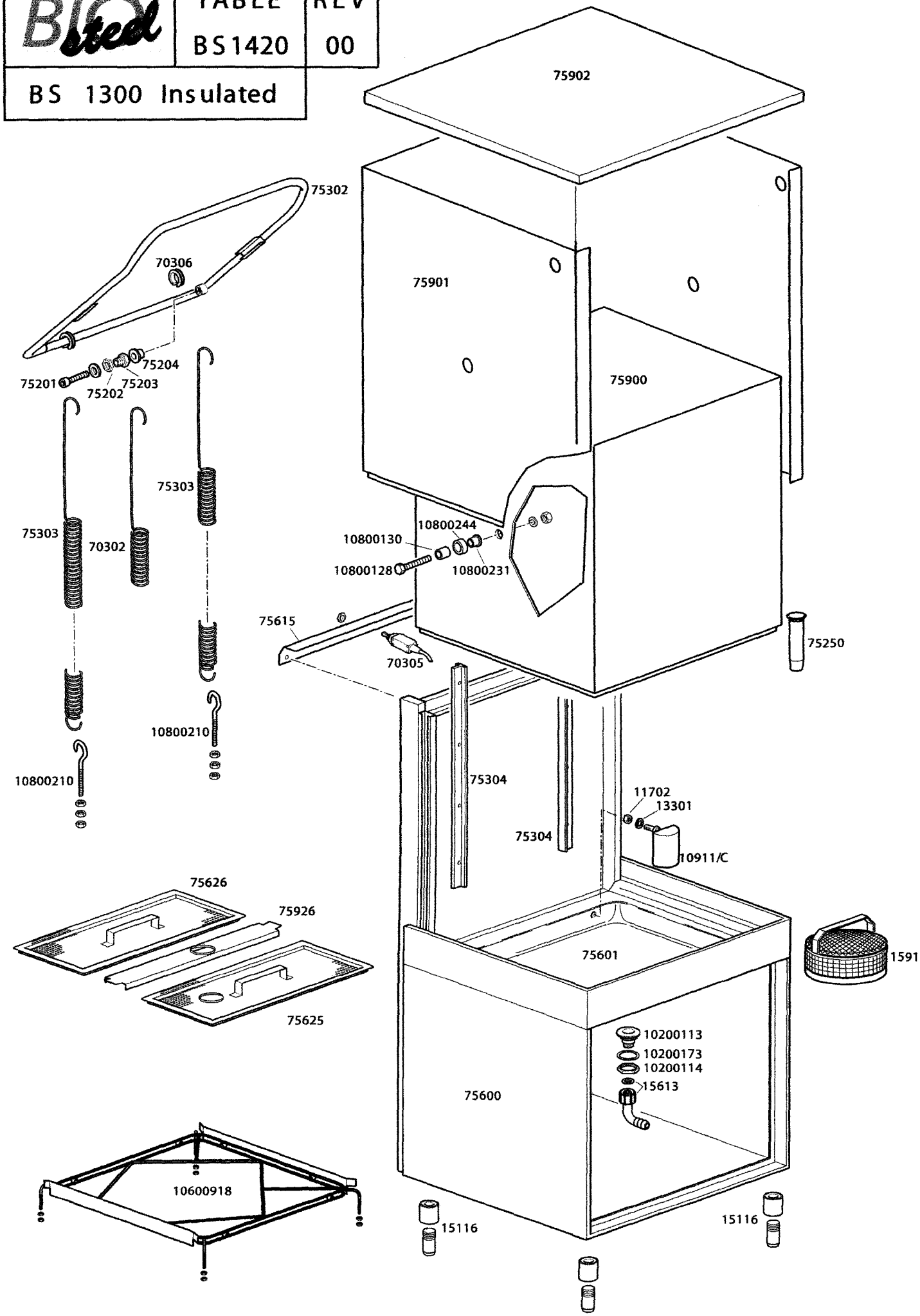

DISH-WASHER BS 1300 INSULATED

TABLE
BS1420

CODE	DESCRIPTION	CODE	DESCRIPTION
11702	M8 stainless steel nut		
13021	DEM-40 gasket		
13301	14x8x1,5 d. gasket		
15116	Complet 2" P130 small foot		
15613	1" nylon elbow		
15911	Complete stainless steel filter		
70302	Rear spring		
70305	MF17 switch for roller conveyor		
70306	Spring hook-joint		
75201	M14x39 stainless steel bolt		
75202	22x6 M18 brass nut		
75203	22x14 M18 brass bush		
75204	22x13 d. nylon bush		
75302	Handle		
75303	Rear spring		
75304	Top runner		
75600	Complete stainless steel base		
75601	Complete tub		
75615	Back axis		
75625	Filter with hole		
75626	Filter		
75900	Top		
75901	Counter-cover thermic insulation		
75902	Cover thermic insulation		
75926	Axis filter holder		
500618	Overflow device		
10200113	Floor drain		
10200114	Drain pipe fitting nut		
10200173	Drain pipe fitting		
10600918	Stainless steel basket support		
10800128	l=40 mm fixing pin		
10800130	Spacer pin handle		
10800210	Tie rod screw with hook		
10800231	Bush for door roller		
10800244	40x10x8 door roller		
10911/C	Complete air trap		