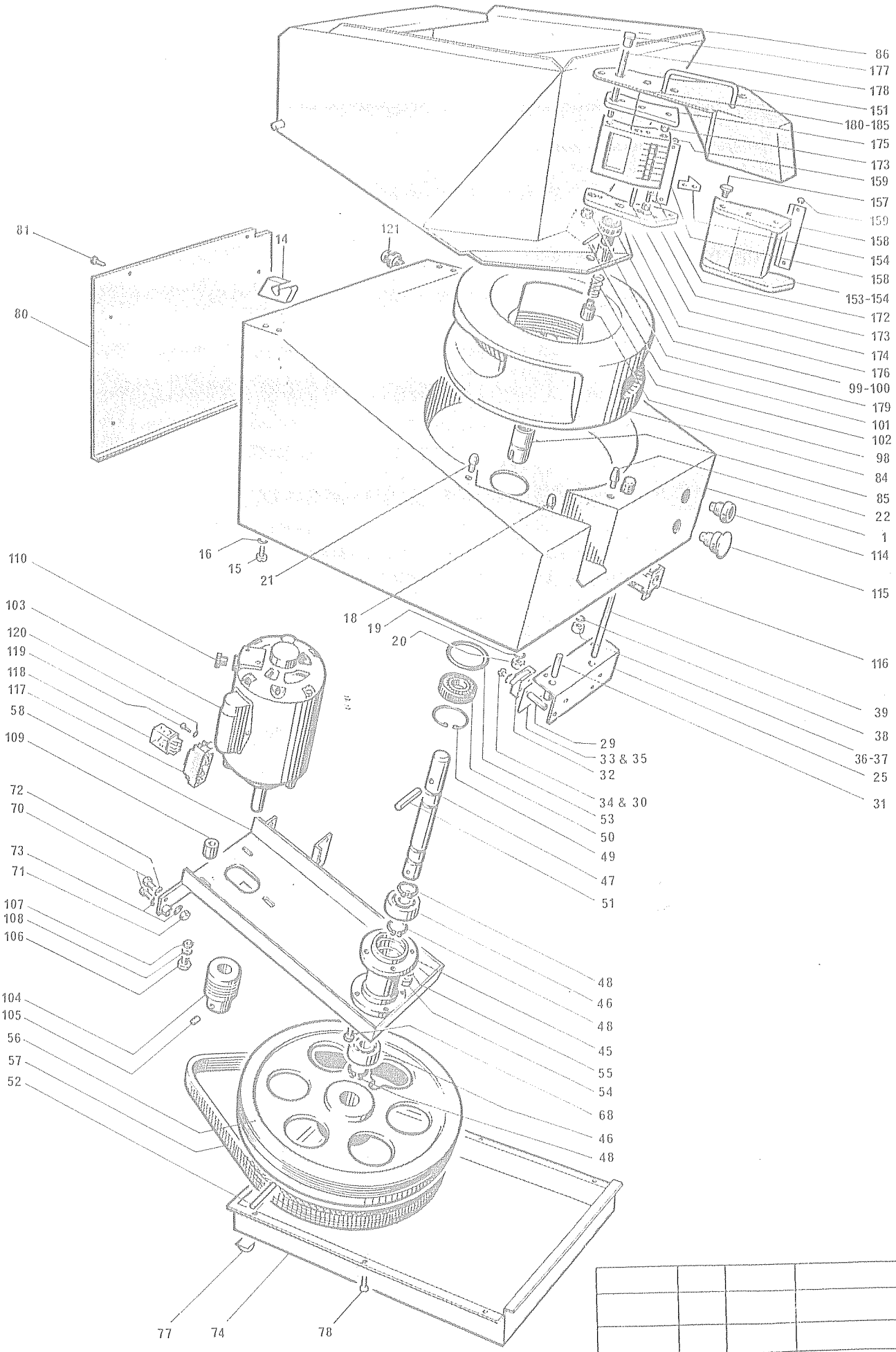

20/9/90	1		
DATE	ISS	CHKD	CH. NOTE No
SHEET 2 OF 37			

FRYCUTTER POTATO CHIPPING MACHINE — MODEL PC1.

PARTS LIST

Item/ Illus.No.	Description	Quantity	Part No.
1	Casing Fabrication	1	E32/067
14	Trunnion	2	A13/024
15	Screw — M4 x 12-Pan Hd.	4	D21/038
16	Washer — M4-Shakeproof	4	D25/007
18	Bottom Spigot	2	L34/005
19	Washer — M6-Shakeproof	3	D25/005
20	Nut — M6-Hex-Full	3	D20/013
21	Rear Dowel	1	L34/039
22	Front Dowel	1	L34/047
25	Switch Actuator Bracket	1	L32/071
29	Distance Bush	2	A22/001
30	Screw — M3 x 40-Pan Hd.	2	D21/108
31	Magnet	1	A31/001
32	Microswitch	2	~~G307~~ NOW G45/304
33	Insulator	2	G308
34	Screw — M3 x 16-Pan Hd.	2	D21/034
35	Stop Bracket	2	E32/073
36	Washer — M3-Shakeproof	4	D25/006
37	Nut — M5	2	D20/038
38	Washer — M5-Shakeproof	2	D25/004
39	Actuator for Microswitch	2	S813/1
45	Bearing Housing	1	C25/007
46	Bearing	2	A01/032
47	Shaft	1	L34/012
48	Circlip — external	4	D27/005
49	Circlip — internal	1	D27/016
50	Oil Seal	1	A02/037A
51	Drive Pin for Rotor	1	D28/019
52	Tension Pin for Pulley	1	D26/013
53	'O' Ring	1	A02/041
54	Nut — M6-Hex Full	4	D20/013
55	Washer — M6-Shakeproof	4	D25/005
56	Pulley — Driven	1	L34/099
57	Belt	1	A05/033
58	Motor Plate Fabrication	1	E32/062
68	Screw — M6 x 16-Hex Taptite	4	D22/029
70	Screw — M6 x 16-Hex	4	D19/039
71	Nut — M6-Hex Full	2	D20/013
72	Washer — Special	2	D08/024
73	Washer — M6-Shakeproof	4	D25/005
74	Plinth Base	1	E32/059
77	Foot	4	A10/480
78	Self Tapping Screw Type B	6	D22/028
80	Back Panel	1	E32/068
81	Self Tapping Screw Type B	6	D22/028
84	Rotor	1	C25/004
85	Bush	1	L34/082
86	Hopper Fabrication	1	E32/069
98	Interlock Body Assy.	1	S61/020
99	Interlock Knob	1	M69
100	Interlock Knob Cap	1	M48
101	Tension Pin	1	D26/017
102	Spring	1	A12/011
103	Motor — 1/3 HP W/Thermatrip: 220-240-1-50	1	G40/083
104	Pulley — Driver	1	L34/097
105	Setscrew M6	2	D22/041

DATE	ISS	CHKD	CH. NOTE No
14/2/92	2		3298

SHEET 3 OF 37

	Item/ Illus.No.	Description	Quantity	Part No.	
	106	Screw — M6 x 16-Hex	3	D19/069	D19/115
	107	Washer — M6-Plain	3	D25/019	
	108	Washer — M6-Shakeproof	3	D25/005	
	109	Packing Pieces	3	L02/013	
	110	Bush — Cable	1	A10/246	
	114	Push Button — Green	1	G30/166	
	115	Push Button — Red — Mushroom	1	G30/167	
	116	Contact Block	2	G30/104	
	117	Socket Base for Relay	1	G30/189	
MTG CLIP	118	Relay	1	G30/191	G30/260
	119	Screw — M4 x 20 Pan Hd.	2	D21/040	
	120	Washer — M4-Plain	2	D25/014	
	121	Cable Strain Relief	1	G306	
	151	Knife Block Carrier	1	E32/070	
	153	Moulded Knife Block			
		9mm		M78	
		12mm		M77	
	154	Chip Blade — Slitting			
		6mm	13	L34/066	
		9mm	8	"	
		10mm	7	"	
		12mm	6	"	
		14mm	5	"	
		Knife Block Assy complete with			
		Knife Block Carrier			
		6mm		S754	
		9mm		S755	
		10mm		S756	
		12mm		S757	
		14mm		S758	
	158	Blade — Slicing	1	L34/074	
	159	Screw — AB-No.6 x ½" Pan Hd.	2	D22/025	
	172	Stud	1	L34/070	
	173	Nut	2	D20/013	
	174	Pin	1	L34/071	
	175	Upper Plate (White)	1	M46	
	176	Lower Plate (Grey)	1	M46A	
	177	Location Bush	2	L34/072	
	178	Stud	2	L34/068	
	179	Nut	2	L34/069	
		Chip Block			
	180	6mm		L34/058	
	181	9mm		L34/059	
	182	10mm		L34/078	
	183	12mm		L34/060	
	184	14mm		L34/061	
		Scallop Block Assy comprising parts below:			
	185	6mm		M41	
	158	Blade — Slicing	1	L34/074	
	159	Screw — AB-No.6 x ½" Pan Hd.	2	D22/025	
	172	Stud	2	L34/068	
	175	Upper Plate (White)	1	M46	
	176	Lower Plate (Grey)	1	M46A	
	177	Bush	2	L34/072	
	179	Nut — Special	2	L34/069	
		Scallop Block Assy complete with			
		Knife Block Carrier			
		6mm		S753	

DATE	ISS	CHKD	CH. NOTE No
16/1/92	2		3193
20/9/90	1		

SHEET 4 OF 37.