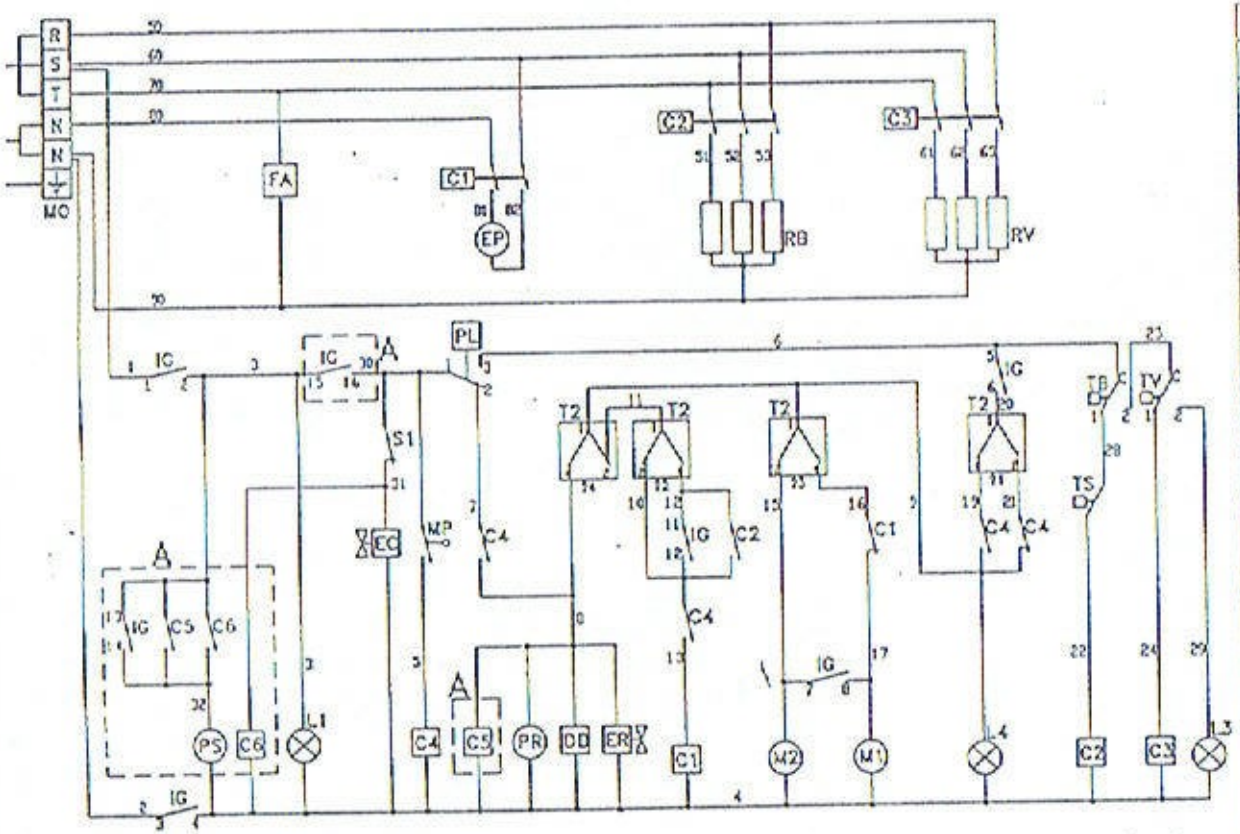

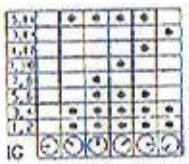

V45 DP

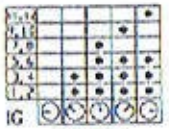

V45

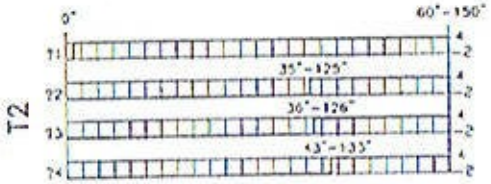

A VERSIONE CON POMPA DI SCARICO
AUSFÜHRUNG MIT LAUGENPUMPE
MODEL AVEC POMPE DE VIDANGE
MODEL WITH DRAIN PUMP

WIRING DIAGRAM
V45DP

IG	INTERRUTTORE GENERALE HAUPTSCHALTER	INTERRUPTEUR GENERAL MAIN SWITCH
L1	SPIA INTERRUTTORE GENERALE HAUPTSCHALTERLAMPE	VOYANT LUMINEUX IG MAIN-SWITCH WARNING-LAMP
RV	RESISTENZA VASCA TANKHEIZKOERPER	RESISTANCE CUVE TANK HEATER
RB	RESISTENZA BOILER BOILERHEIZKOERPER	RESISTANCE SURCHAUFFEUR BOILER HEATER
PL	PRESSOSTATO LIVELLO NIVEAUDRUCKWAECHTER	PRESSOSTAT NIVEAU LEVEL PRESSURE SWITCH
EP	ELETTROPOMPA ELEKTROPUMPE	ELECTROPOMPE ELECTROPUMP
T2	TIMER CICLO SPUELVORGANG TIMER	TIMER CYCLE CYCLE TIMER
C4	CONTATTORE DI SERVIZIO KONTAKTE	CONTACTEUR DE SERVICE SERVICE CONTACTOR
TB	TERMOSTATO BOILER BOILERTHERMOSTAT	THERMOSTAT SURCHAUFFEUR BOILER THERMOSTAT
TV	TERMOSTATO VASCA TANKTHERMOSTAT	THERMOSTAT CUVE TANK THERMOSTAT
M2	MICROMOTORE LENTO LANGSAMER MIKROMOTOR	MICROMOTEUR LENT SLOW MICROMOTOR
L4	SPIA CICLO KONTROLLEUCHTE SPULVORGANG	VOYANT LUMINEUX CYCLE CYCLE LAMP
FA	FILTRO ANTIDISTURBO STORSCHUTZEINRICHTUNG	FILTRE ANTI PERTURBATION RADIO INTERFERENCE SUPPRESSOR
CD	DOSATORE DETERGENTE WASCHMITTELDOSIERGERAET	DOSEUR DETERGENT DETERGENT DISPENSER
TS	TERMOSTATO SICUREZZA SICHERHEITSTHERMOSTAT	THERMOSTAT DE SECURITE SAFETY THERMOSTAT
MO	MORSETTIERA NETZANSCHLUSSKLEMMEN	BOITE DE CONNECTION MAIN TERMINAL BOARD
MP	MICROINTERRUTTORE PORTA TUERSCHALTER	MICROINTERRUPTEUR PORTE DOOR MICROSWITCH
C1	CONTATTORE ELETTROPOMPA SCHALTSCHUTZ ELEKTROPUMPE	CONTACTEURS ELECTROPOMPE ELECTROPUMP CONTACTORS
C2/3	CONTATTORI RESISTENZE SCHALTSCHUTZ HEIZKOERPER	CONTACTEURS RESISTANCE HEATERS CONTACTORS
M1	MICROMOTORE VELOCE SCHNELLER MIKROMOTOR	MICROMOTEUR RAPIDE FAST MICROMOTOR
PT	PROTEZIONE TERMICA THERMISCHE SCHUTZ	PROTECTION TERMIQUE THERMAL PROTECTION
L3	SPIA "MACCHINA PRONTA" KONTROLLEUCHTE "BETRIEBSBEREIT"	VOYANT "MACHINE PRETE" "MACHINE READY" WARNING LAMP
CS/6	CONTATTORE POMPA SCARICO LAUGENPUMPENKONTAKT	CONTACTEUR POMPE DE VIDANGE DRAIN PUMP CONTACTOR
PS	POMPA DI SCARICO ABFLUSSPUMPE	POMPE DE VIDANGE DRAIN PUMP
ER	ELETTROVALVOLA RISCIACQUO NACHSPULVENTIL	ELECTROVANNE DE RINCAGE RINSE VALVE
EC	ELETTROVALVOLA CARICO W.A.G. FUELLUNGSVENTIL W.A.G.	ELECROVANNE DE CHARGE W.A.G. W.A.G. INLET VALVE
S1	SENSORE LIVELLO MASSIMO W.A.G. NIVEAUFUHLER W.A.G.	CAPTEUR NIVEAU MAXIMUM W.A.G. W.A.G. MAXIMUM LEVEL SENSOR
PR	POMPA AUMENTO PRESSIONE DRUCKSTEIGERUNGSPUMPE	POMPE DE RINCAGE BOOSTER PUMP

DATA DATUM DATE DATE	05 - 03 - 98	MOD. MOD. MOD. MOD.	V45 - V45 (DP)
DISEGNO N° ZEICHNUNGS N° DESSIN N°	FI.AT.123		