lamber

Newscan

DSP44

Ed.
2008
March

Rev. A

Dishwasher

DSP44

SPARE PARTS

CE

lamber	WASH COMPONENTS	MOD. DSP44	TAV. 1 A ED. 03/2008

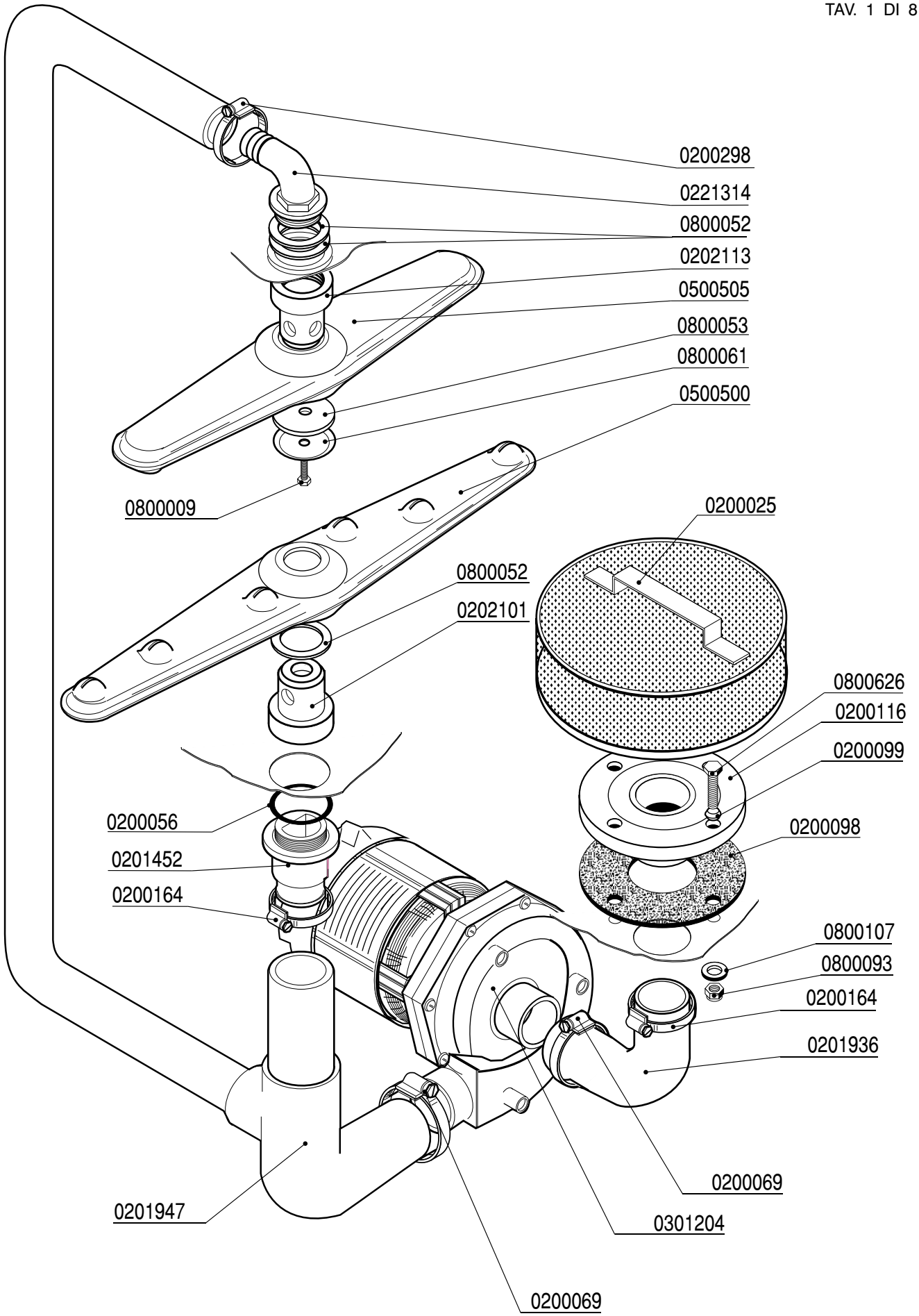

lamber	RINSE COMPONENTS	MOD. DSP44	TAV. 2 A ED. 03/2008

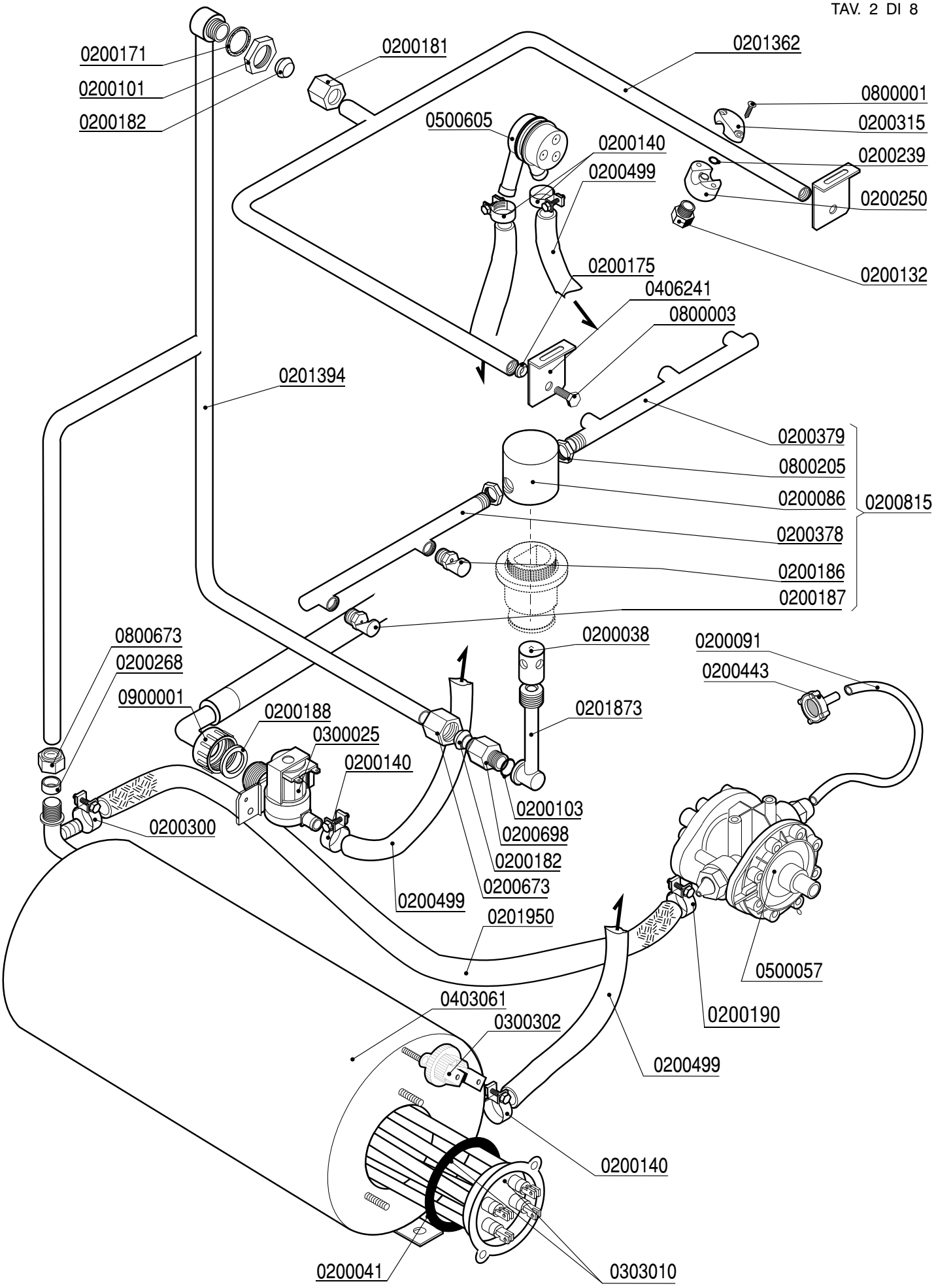

lamber	TANK COMPONENTS	MOD. DSP44	TAV. 3 A ED. 03/2008

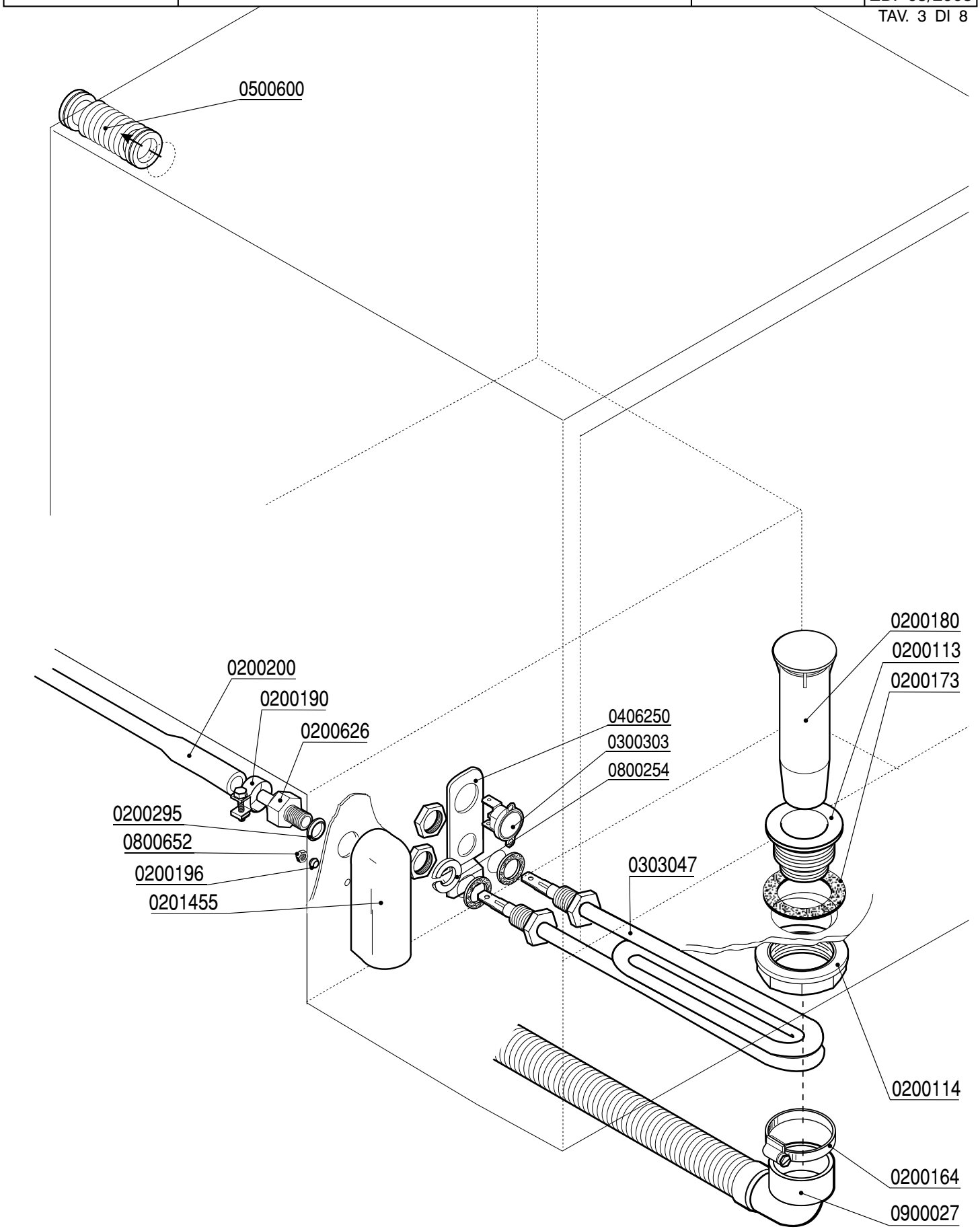

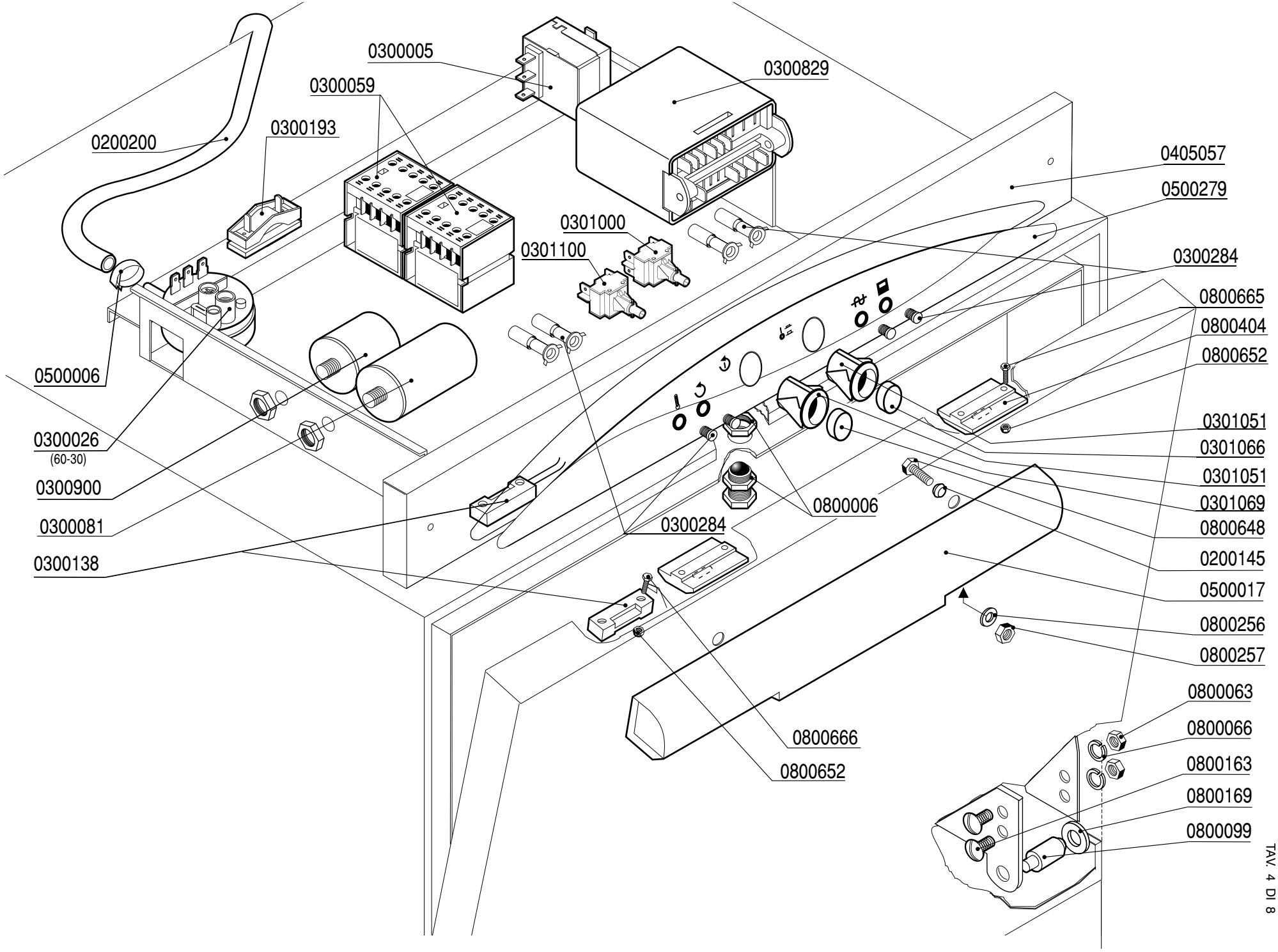

lamber

CONTROL BOX

MOD.
DSP44

TAV.
4 A

Ed. 03/2008

TAV. 4 DI 8

lamber	DRAIN PUMP PARTS	MOD. **DSP44**	TAV. **5 A** ED. 03/2008

TAV. 5 DI 8

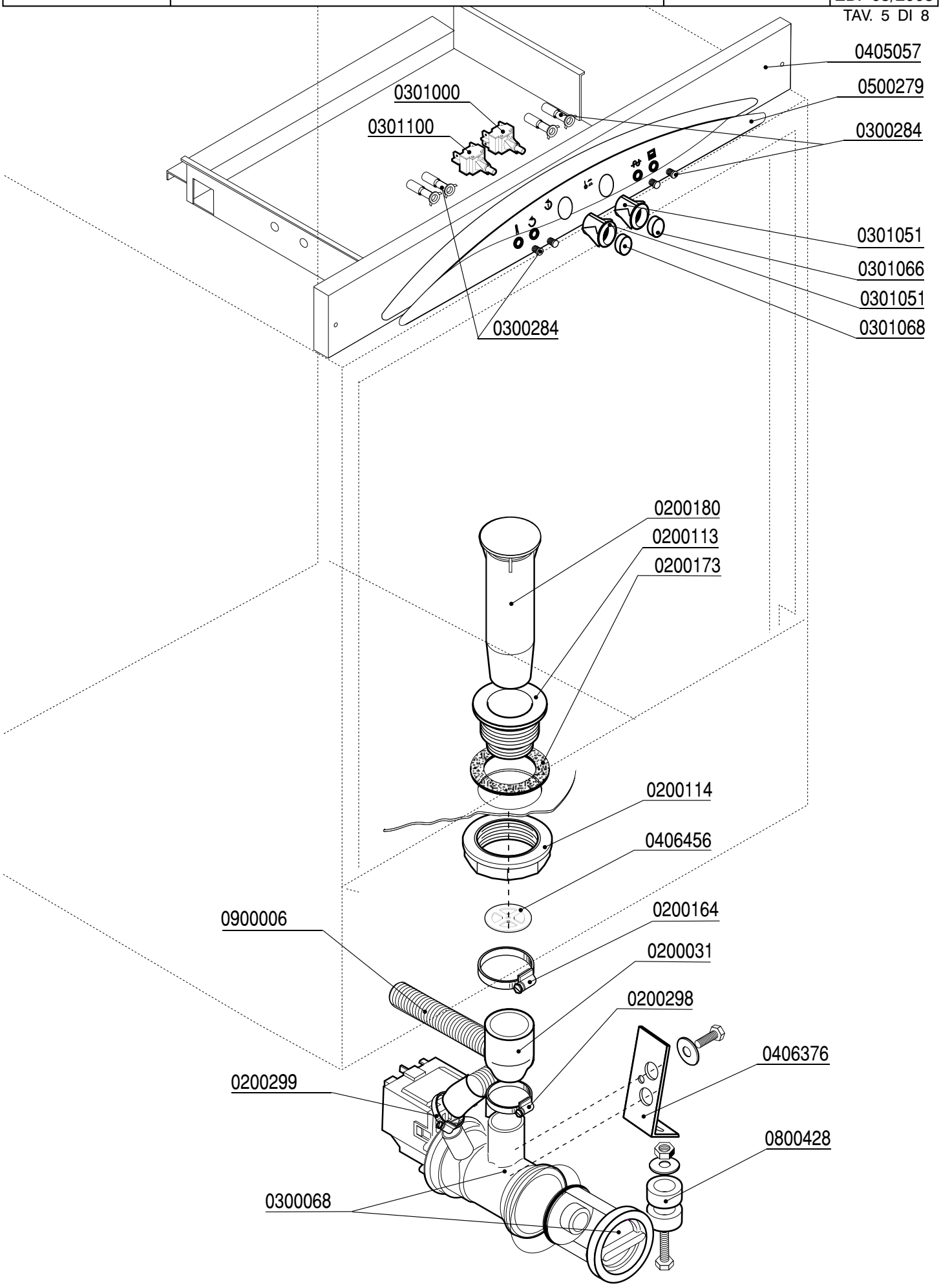

lamber	HOOD	MOD. DSP44	TAV. 6 A ED. 03/2008

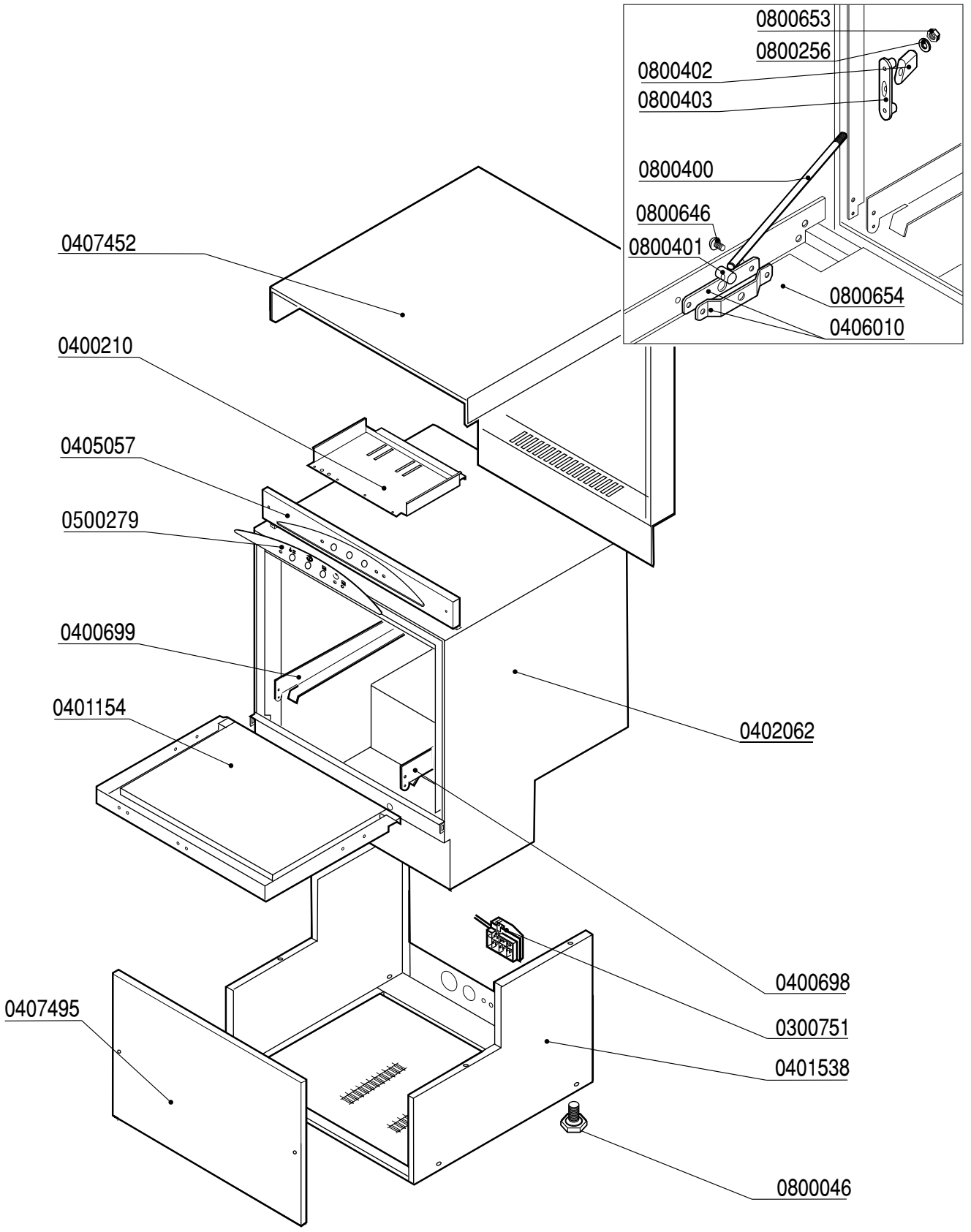

lamber	BREAK TANK COMPONENTS	MOD. **DSP44**	TAV. **7 A** ED. 03/2008

SRS

TAV. 7 DI 8

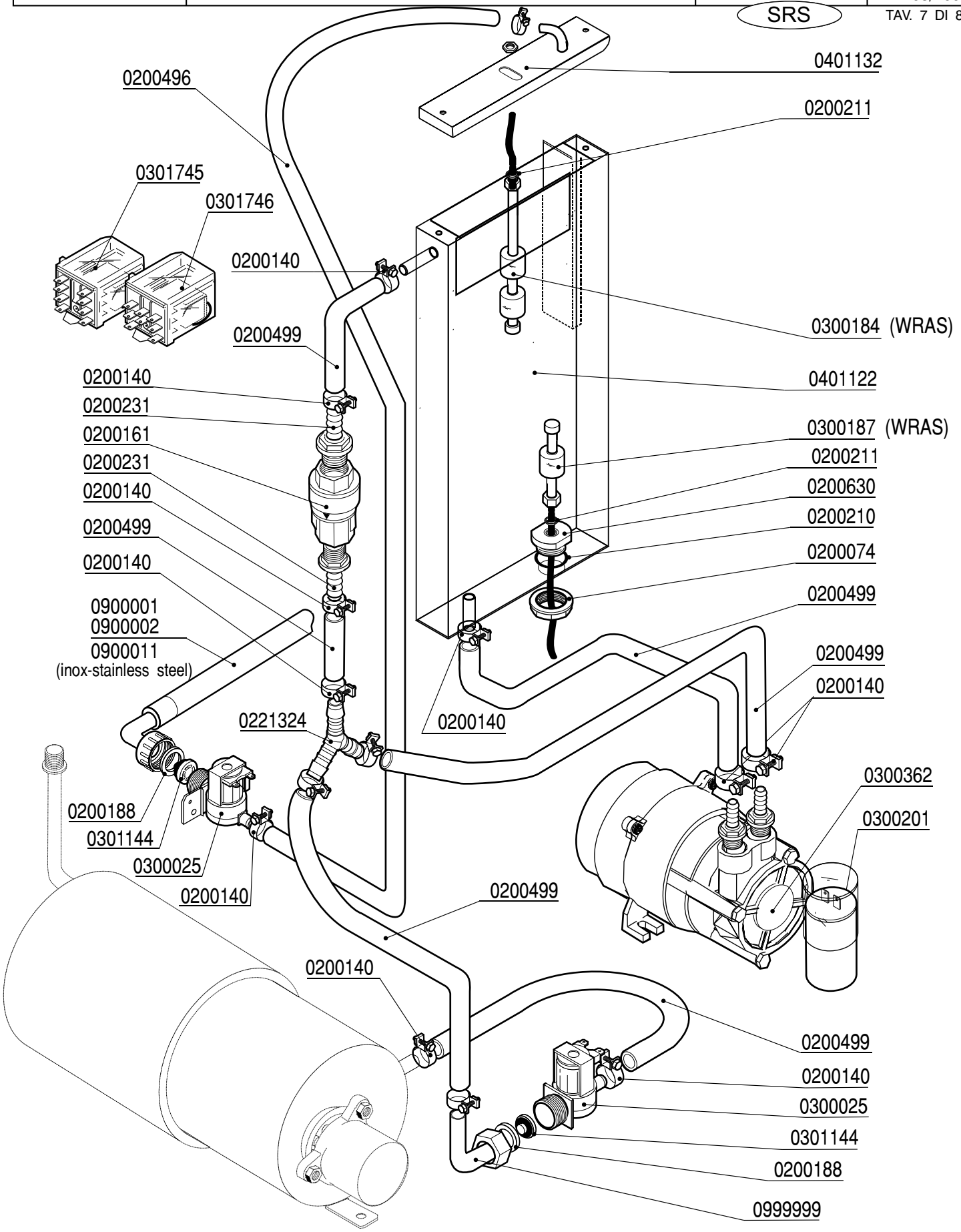

lamber	DETERGENT PUMP	MOD. **DSP44**	TAV. **8 A** ED. 03/2008

TAV. 8 DI 8

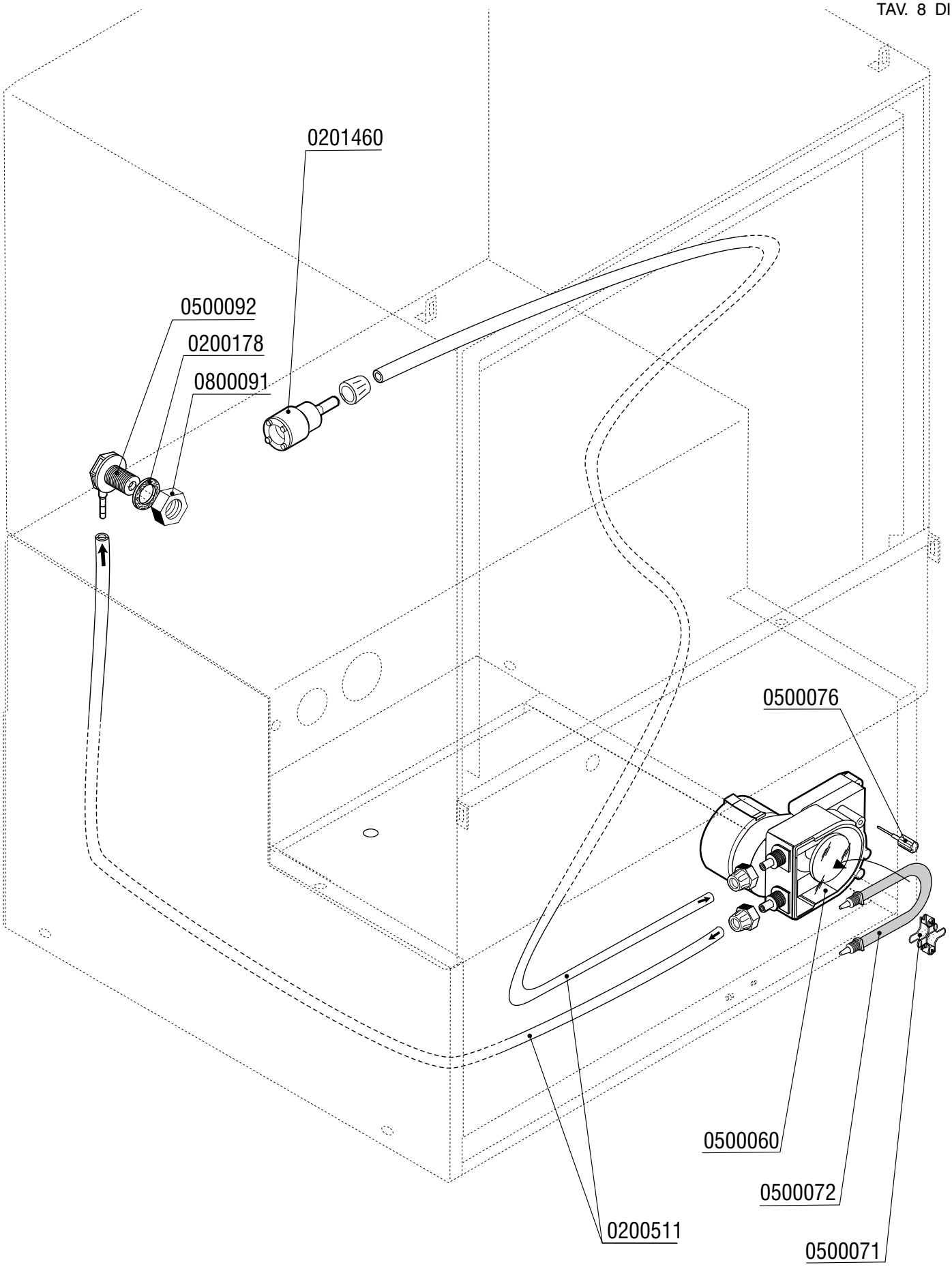

1 cm³/sec=3,6 Lt/h