lamber

Newscan

DSP41

Ed.
01/2007

Rev. A

Dishwasher

DSP41

SPARE PARTS

CE

lamber	WASH COMPONENTS	MOD. DSP41	TAV. 1 A ED. 01/2007

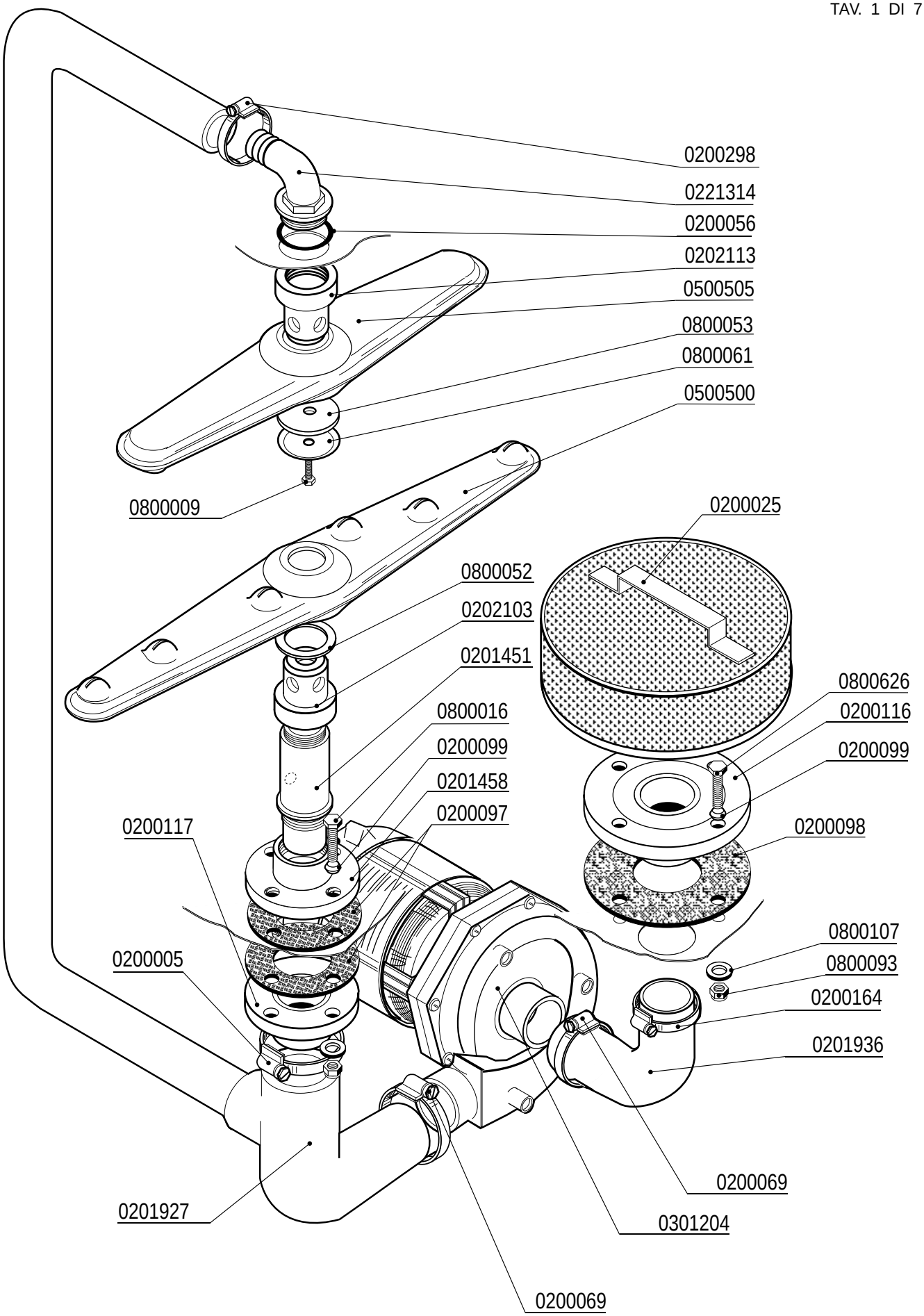

lamber	RINSE COMPONENTS	MOD. DSP41	TAV. 2 A ED. 01/2007

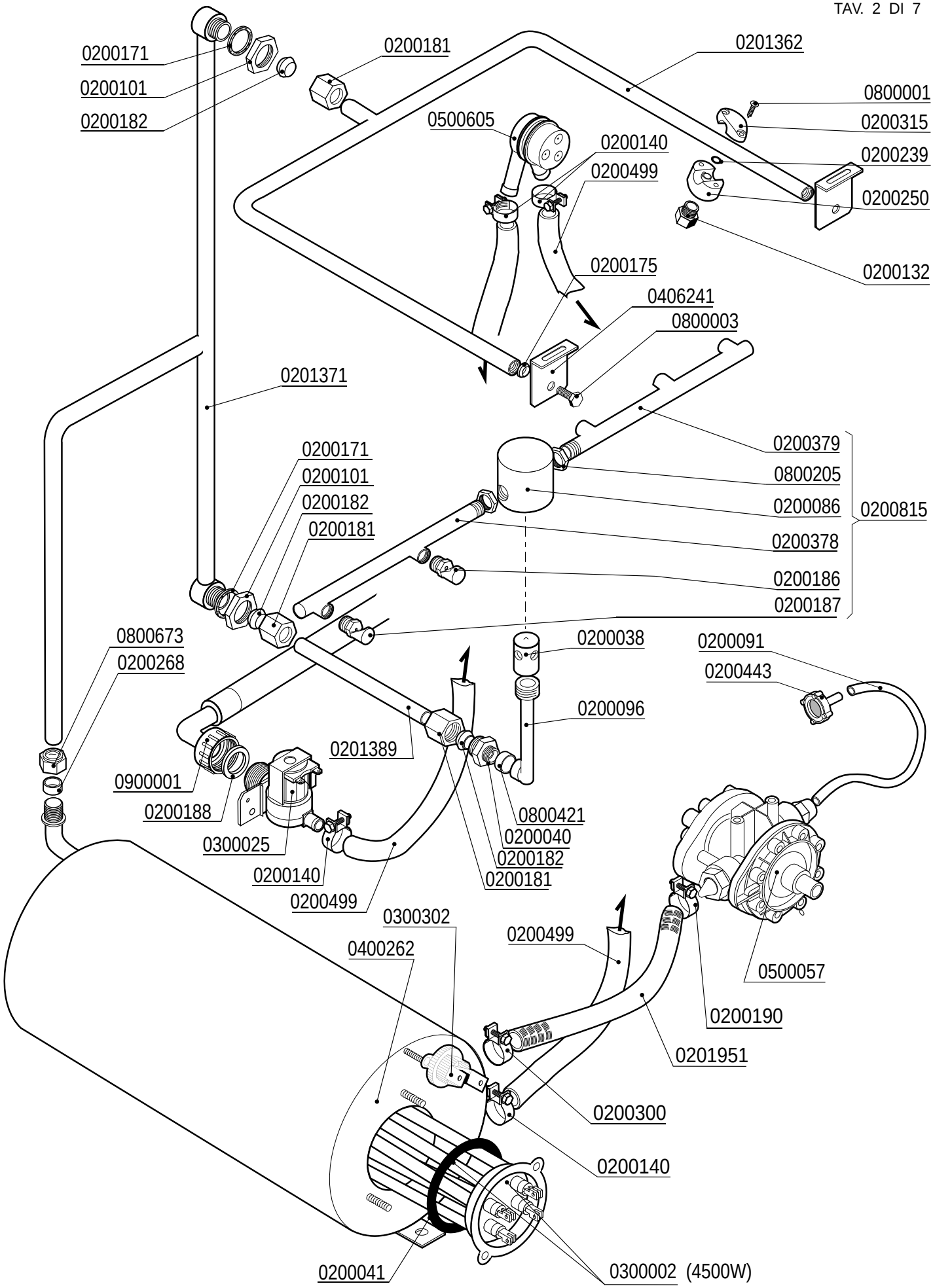

lamber	TANK COMPONENTS AND DRAIN PUMP	MOD. DSP41	TAV. 3 A ED. 01/2007

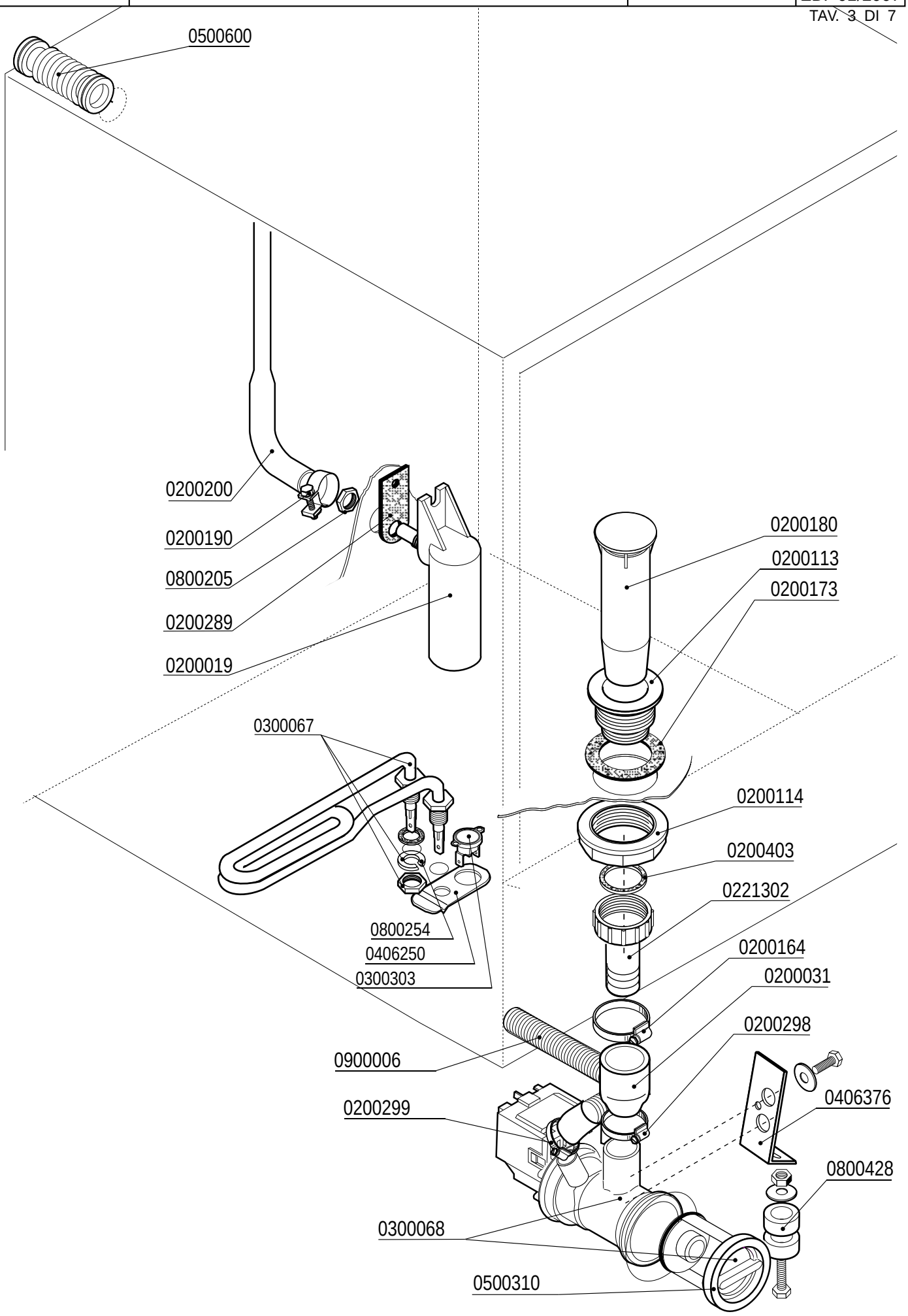

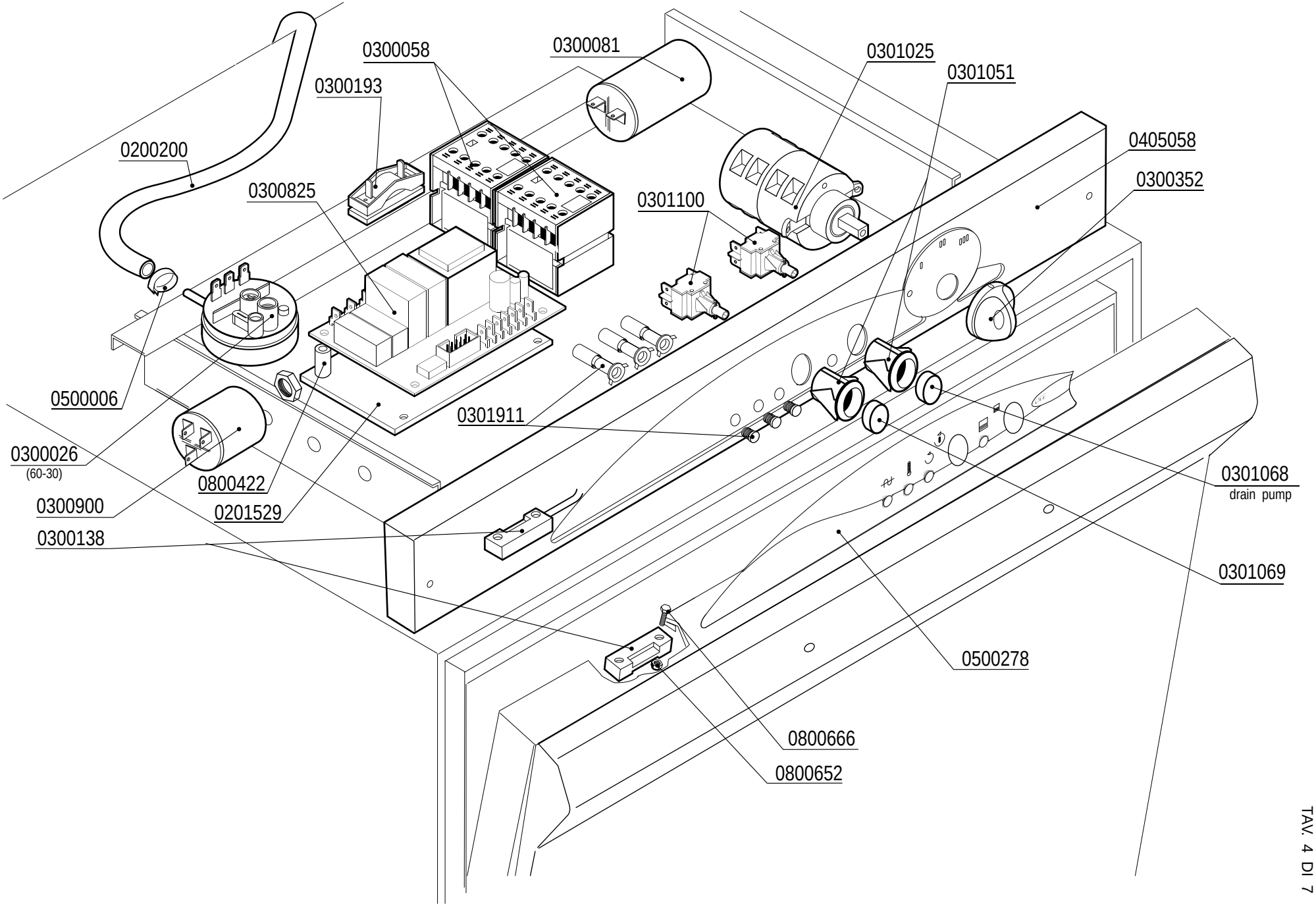

lamber

CONTROL BOX

MOD.
DSP41

TAV.
4 A

ED. 01/2007

TAV. 4 DI 7

lamber	HOOD	MOD. DSP41	TAV. 5 A ED. 01/2007

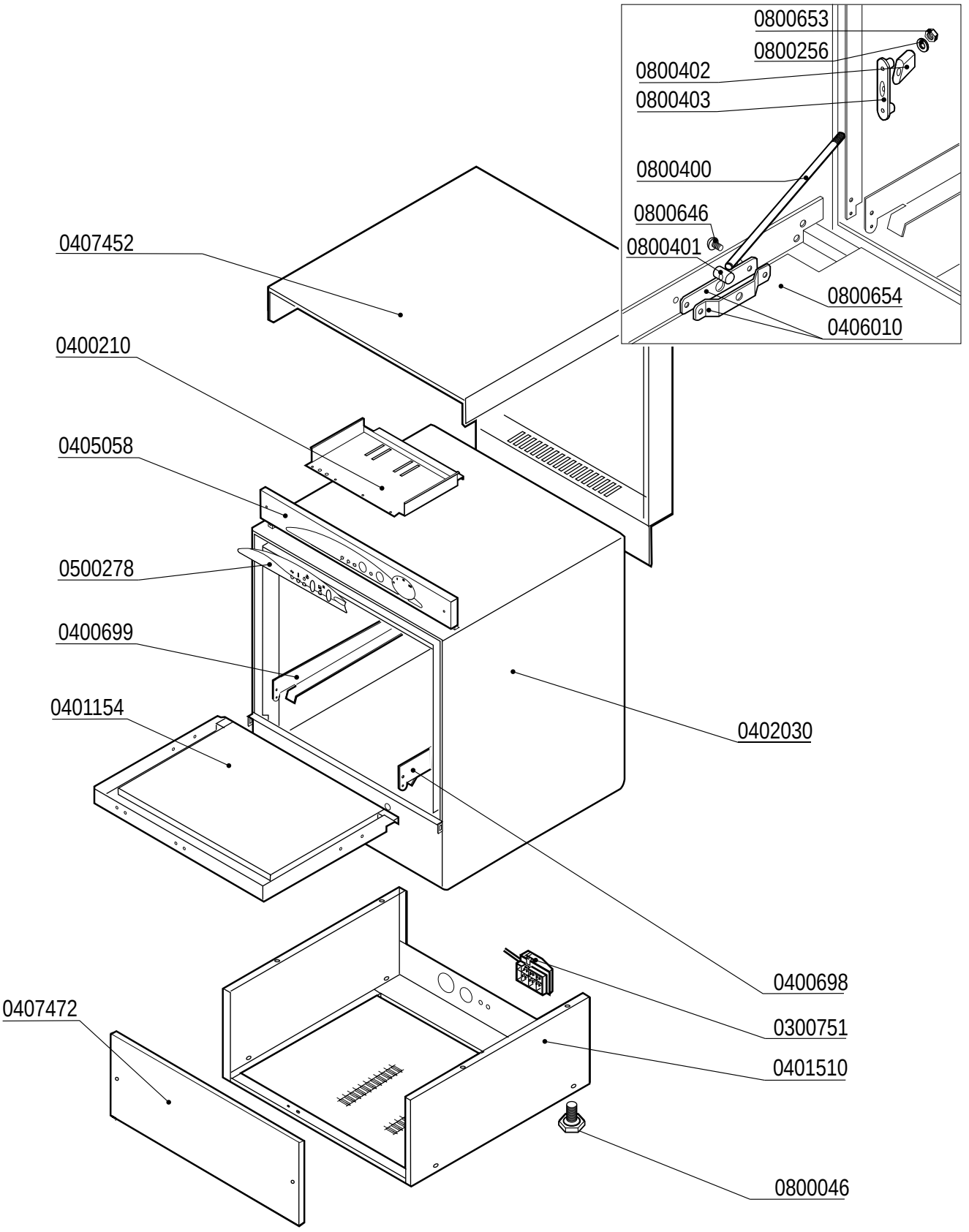

lamber	BREAK TANK COMPONENTS	MOD. DSP41	TAV. 6 A
		SRS	ED. 01/2007
			TAV. 6 DI 7

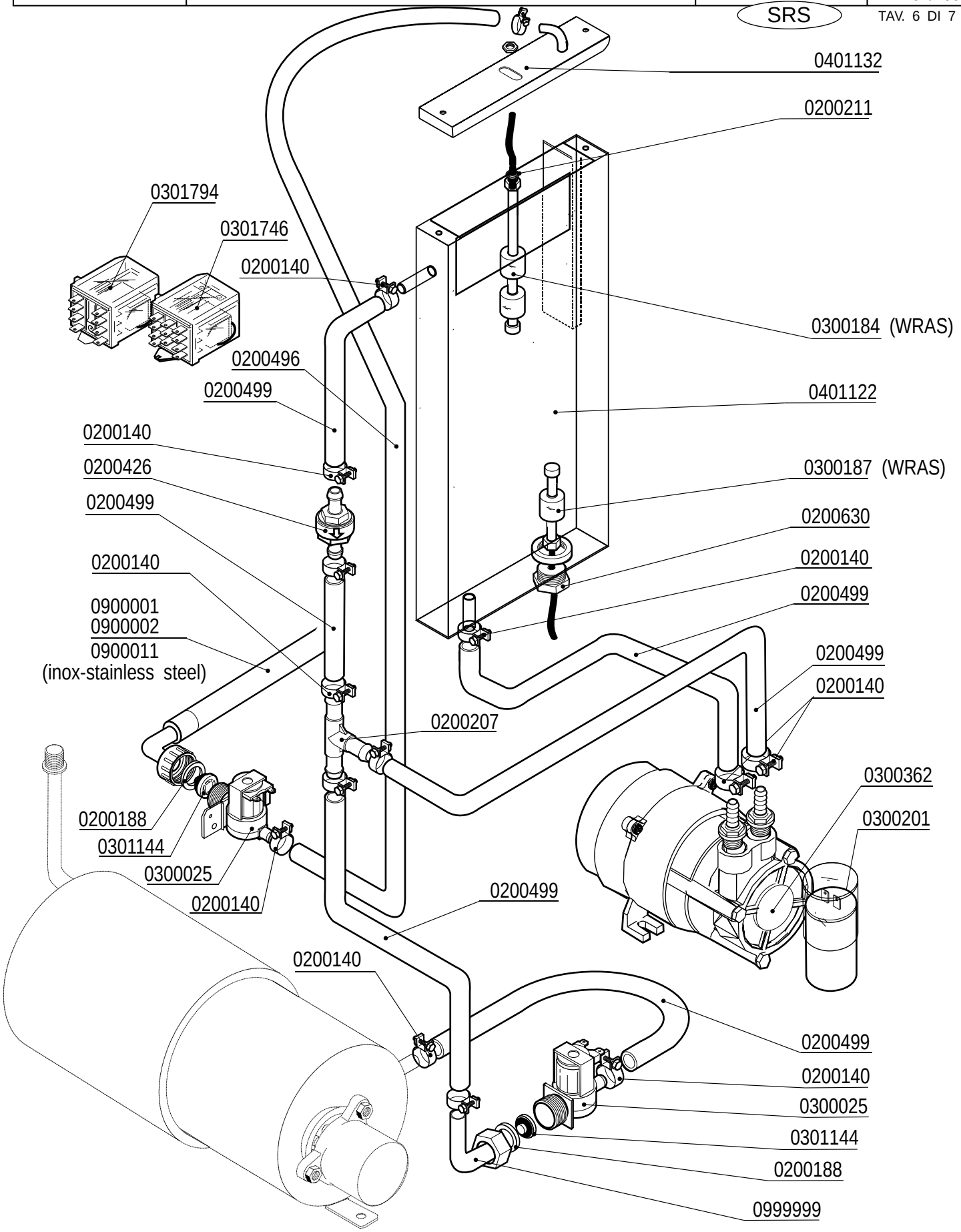

lamber	DETERGENT PUMP	MOD. DSP41	TAV. 7 A ED. 01/2007

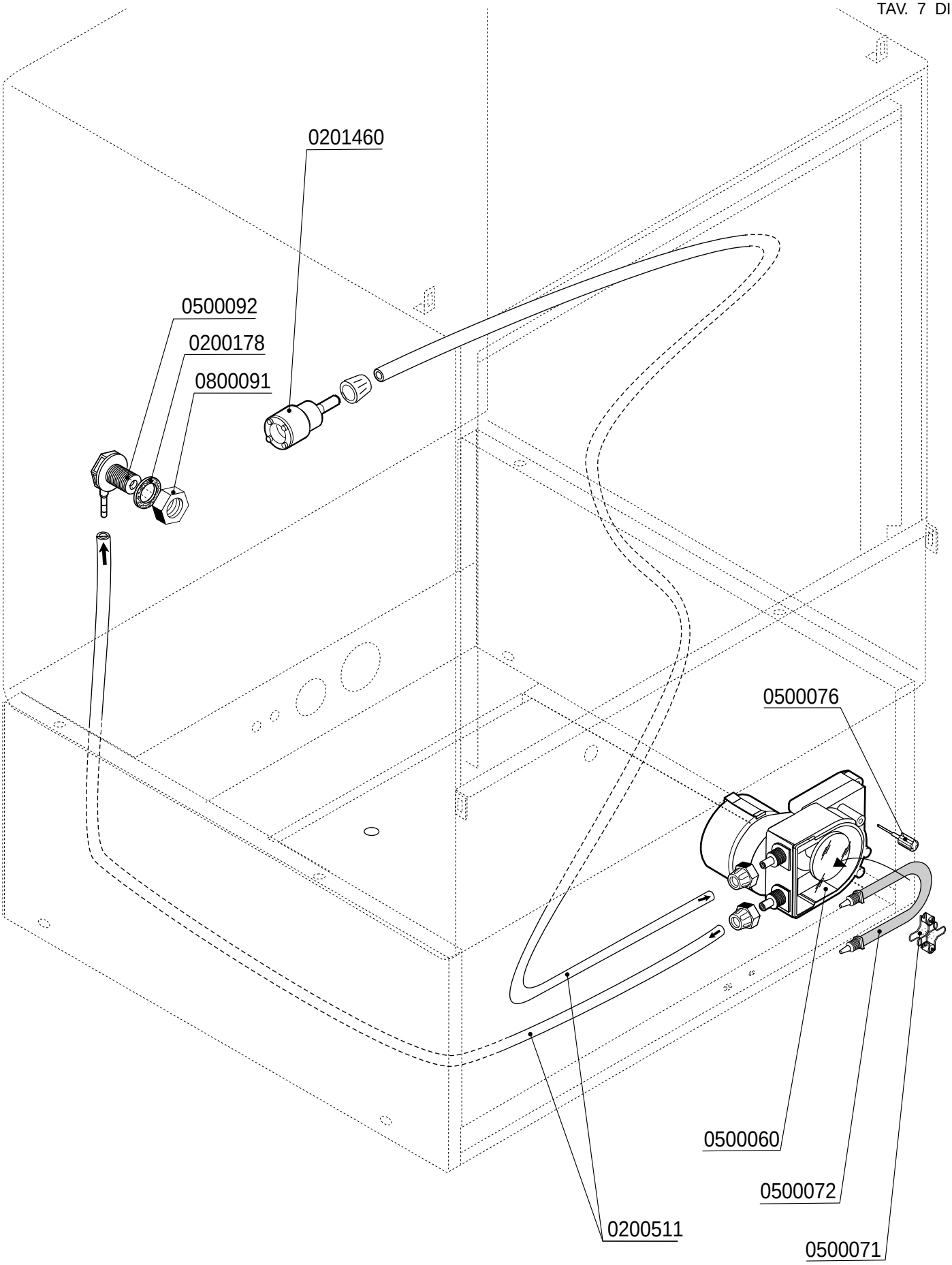

1 cm³/sec=3,6 Lt/h